Owner's Manual

For your safety and comfort, read carefully and keep in the vehicle.

Not for Reproduction

HILUX

TOYOTA

Not for Reproduction

©2017 TOYOTA MOTOR CORPORATION
All rights reserved. This material may not be reproduced or copied, in whole or in part, without the written permission of Toyota Motor Corporation.

	Pictorial index	Search by illustration
1	**For safety and security**	Make sure to read through them
2	**Instrument cluster**	How to read the gauges and meters, the variety of warning lights and indicators, etc.
3	**Operation of each component**	Opening and closing the doors and windows, adjustment before driving, etc.
4	**Driving**	Operations and advice which are necessary for driving
5	**Audio system**	Operating the audio system
6	**Interior features**	Usage of the interior features, etc.
7	**Maintenance and care**	Caring for your vehicle and maintenance procedures
8	**When trouble arises**	What to do in case of malfunction or emergency
9	**Vehicle specifications**	Vehicle specifications, etc.
	Index	Search by symptom
		Search alphabetically

Not for Reproduction

For your information 8
Reading this manual.....12
How to search 13
Pictorial index 14

1 For safety and security

1-1. For safe use
Before driving.....26
For safe driving 28
Seat belts.....30
SRS airbags.....35
Exhaust gas precautions 45

1-2. Child safety
Riding with children.....46
Child restraint systems 47

1-3. Theft deterrent system
Engine immobilizer system 71
Alarm 73

2 Instrument cluster

2. Instrument cluster
Warning lights and indicators..... 76
Gauges and meters..... 82
Multi-information display (Type A) 87
Multi-information display (Type B) 91
Fuel consumption information 99

Not for Reproduction

3 Operation of each component

3-1. Key information
Keys.....102
3-2. Opening, closing and locking the doors
Side doors.....107
Access panels (smart-cab models only) 112
Tailgate.....113
Smart entry & start system 116
3-3. Adjusting the seats
Front seats.....123
Rear seats 125
Head restraints 128
3-4. Adjusting the steering wheel and mirrors
Steering wheel.....131
Inside rear view mirror 133
Outside rear view mirrors 134
3-5. Opening and closing the windows
Power windows.....137
Quarter windows (smart-cab models).....141

4 Driving

4-1. Before driving
Driving the vehicle..... 144
Cargo and luggage..... 155
Trailer towing..... 156
4-2. Driving procedures
Engine (ignition) switch (vehicles without smart entry & start system)..... 167
Engine (ignition) switch (vehicles with smart entry & start system)..... 170
Automatic transmission..... 178
Manual transmission..... 186
Turn signal lever..... 192
Parking brake..... 193
4-3. Operating the lights and wipers
Headlight switch..... 194
Fog light switch 198
Windshield wipers and washer 199
4-4. Refueling
Opening the fuel tank cap 201

Not for Reproduction

4-5. Using the driving support systems
Cruise control.....206
Rear view monitor system 210
Four-wheel drive system....220
Rear differential lock system 230
Driving assist systems 234
Downhill assist control system 241
DPF (Diesel Particulate Filter) system 244

4-6. Driving tips
Winter driving tips 250

5 Audio system

5-1. Using the multimedia system
Audio system types.....256
Multimedia system 258

5-2. Basic Operations
Multimedia system Operations 260
Steering wheel audio switches.....264
AUX port/USB port.....265
Basic Audio Operations 267

5-3. Setup
"Setup" menu 269
General settings.....270
Audio settings 272
Display settings.....274

5-4. Using the audio system
Selecting the audio source 276
List screen operation..... 278
Optimal use of the audio system..... 281
Audio screen adjustment 283

5-5. Using the radio
Radio operation..... 285

5-6. Playing an audio CD and MP3/WMA/AAC discs
CD player operation 287

5-7. Using an external device
iPod player operation 293
USB memory device player operation 298
Using the AUX port 302
VTR 303

5-8. Connecting Bluetooth®
Preparations to use wireless communication..... 304
Registering a Bluetooth® audio player for the first time 307
Registering a Bluetooth® phone for the first time 308
Registering a Bluetooth® device..... 310
Connecting a Bluetooth® device..... 312
Displaying a Bluetooth® device details 315
Detailed Bluetooth® settings..... 317

Not for Reproduction

5-9. Bluetooth® Audio
Listening to Bluetooth® audio 320
5-10. Bluetooth® Phone
Using a Bluetooth® Phone 322
Making a call.....324
Receiving a call.....329
Speaking on the telephone.....330
Bluetooth® phone message function 333
Using the steering wheel switches 337
Bluetooth® phone settings 338
5-11. Contact
Contact/call history settings 340
5-12. Bluetooth®
What to do if... (Troubleshooting) 350
Bluetooth® 354

6 Interior features

6-1. Using the air conditioning system and defogger
Manual air conditioning system..... 360
Automatic air conditioning system..... 365
Seat heaters..... 372
6-2. Using the interior lights
Interior lights list 373
• Personal/interior light main switch 374
• Personal/interior lights 374
• Interior light 374
6-3. Using the storage features
List of storage features..... 376
• Glove box..... 377
• Console box..... 377
• Cup holders 378
• Bottle holders..... 379
• Auxiliary boxes..... 380
Luggage compartment features 383
6-4. Using the other interior features
Other interior features 384
• Sun visors 384
• Vanity mirror 384
• Clock..... 385
• Power outlets 386
• Grocery bag hooks 387
• Coat hooks..... 388
• Armrest 388

Not for Reproduction

7 Maintenance and care

7-1. Maintenance and care
Cleaning and protecting the vehicle exterior 390
Cleaning and protecting the vehicle interior 393
7-2. Maintenance
Maintenance requirements.....396
7-3. Do-it-yourself maintenance
Do-it-yourself service precautions 398
Hood 400
Engine compartment.....402
Tires.....416
Tire inflation pressure 419
Wheels.....421
Air conditioning filter 423
Wireless remote control/ electronic key battery.....425
Checking and replacing fuses 428
Light bulbs 433

8 When trouble arises

8-1. Essential information
Emergency flashers 450
If your vehicle has to be stopped in an emergency.....451
8-2. Steps to take in an emergency
If your vehicle needs to be towed 453
If you think something is wrong 459
Fuel pump shut off system (gasoline engine only) 460
If a warning light turns on or a warning buzzer sounds 461
If a warning message is displayed..... 469
If you have a flat tire..... 474
If the engine will not start 488
If the electronic key does not operate properly (vehicles with smart entry & start system) 490
If the vehicle battery is discharged 494
If your vehicle overheats ... 499
If you run out of fuel and the engine stalls (diesel engine only)..... 503
If the vehicle becomes stuck..... 504

Not for Reproduction

9 Vehicle specifications

9-1. Specifications
Maintenance data (fuel, oil level, etc.).....508
Fuel information.....527
9-2. Customization
Customizable features.....529

Index

What to do if... (Troubleshooting).....534
Alphabetical index.....538

Not for Reproduction

For vehicles with navigation system or multimedia system, refer to the “Navigation and Multimedia System Owner’s Manual” for information regarding the equipment listed below.

- Navigation system
- Audio/visual system

For your information

Main Owner's Manual

Please note that this manual applies to all models and all equipment, including options. Therefore, you may find some explanations for equipment not installed on your vehicle.

All specifications provided in this manual are current at the time of printing. However, because of the Toyota policy of continual product improvement, we reserve the right to make changes at any time without notice.

Depending on specifications, the vehicle shown in the illustrations may differ from your vehicle in terms of equipment.

Accessories, spare parts and modification of your Toyota

A wide variety of non-genuine spare parts and accessories for Toyota vehicles are currently available in the market. Using these spare parts and accessories which are not genuine Toyota products may adversely affect the safety of your vehicle, even though these parts may be approved by certain authorities in your country. Toyota Motor Corporation therefore cannot accept any liability or guarantee spare parts and accessories which are not genuine Toyota products, nor for replacement or installation involving such parts.

This vehicle should not be modified with non-genuine Toyota products. Modification with non-genuine Toyota products could affect its performance, safety or durability, and may even violate governmental regulations. In addition, damage or performance problems resulting from the modification may not be covered under warranty.

Installation of an RF-transmitter system

The installation of an RF-transmitter system in your vehicle could affect electronic systems such as:

- Multiport fuel injection system/sequential multiport fuel injection system
- Cruise control system
- Anti-lock brake system
- SRS airbag system
- Seat belt pretensioner system

Be sure to check with your Toyota dealer for precautionary measures or special instructions regarding installation of an RF-transmitter system.

Further information regarding frequency bands, power levels, antenna positions and installation provisions for the installation of RF-transmitters, is available on request at your Toyota dealer.

Not for Reproduction

Vehicle data recordings

Your Toyota is equipped with several sophisticated computers that will record certain data, such as:

- Engine speed
- Accelerator status
- Brake status
- Vehicle speed
- Shift position (except manual transmission)

The recorded data varies according to the vehicle grade level and options with which it is equipped. Furthermore, these computers do not record conversations, sounds or pictures.

● Data usage

Toyota may use the data recorded in these computers to diagnose malfunctions, conduct research and development, and improve quality.

Toyota will not disclose the recorded data to a third party except:

- With the consent of the vehicle owner or with the consent of the lessee if the vehicle is leased
- In response to an official request by the police, a court of law or a government agency
- For use by Toyota in a lawsuit
- For research purposes where the data is not tied to a specific vehicle or vehicle owner

Not for Reproduction

Event data recorder

This vehicle is equipped with an event data recorder (EDR). The main purpose of an EDR is to record, in certain crash or near crash-like situations, such as an airbag deployment or hitting a road obstacle, data that will assist in understanding how a vehicle's systems performed. The EDR is designed to record data related to vehicle dynamics and safety systems for a short period of time, typically 30 seconds or less. However, data may not be recorded depending on the severity and type of a crash.

The EDR in this vehicle is designed to record such data as:

- How various systems in your vehicle were operating;
- How far (if at all) the driver was depressing the accelerator and/or brake pedal; and,
- How fast the vehicle was traveling.

These data can help provide a better understanding of the circumstances in which crashes and injuries occur.

NOTE: EDR data are recorded by your vehicle only if a non-trivial crash situation occurs; no data are recorded by the EDR under normal driving conditions and no personal data (e.g., name, gender, age, and crash location) are recorded. However, other parties, such as law enforcement, could combine the EDR data with the type of personally identifying data routinely acquired during a crash investigation.

To read data recorded by an EDR, special equipment is required, and access to the vehicle or the EDR is needed. In addition to the vehicle manufacturer, other parties, such as law enforcement, that have the special equipment, can read the information if they have access to the vehicle or the EDR.

● Disclosure of the EDR data

Toyota will not disclose the data recorded in an EDR to a third party except when:

- An agreement from the vehicle's owner (or the lessee for a leased vehicle) is obtained
- In response to an official request by the police, a court of law or a government agency
- For use by Toyota in a lawsuit

However, if necessary, Toyota may:

- Use the data for research on vehicle safety performance
- Disclose the data to a third party for research purposes without disclosing information about the specific vehicle or vehicle owner

Not for Reproduction

Scrapping of your Toyota

The SRS airbag and seat belt pretensioner devices in your Toyota contain explosive chemicals. If the vehicle is scrapped with the airbags and seat belt pretensioners left as they are, this may cause an accident such as fire. Be sure to have the systems of the SRS airbag and seat belt pretensioner removed and disposed of by a qualified service shop or by your Toyota dealer before you scrap your vehicle.

WARNING

General precautions while driving

Driving under the influence: Never drive your vehicle when under the influence of alcohol or drugs that have impaired your ability to operate your vehicle. Alcohol and certain drugs delay reaction time, impair judgment and reduce coordination, which could lead to an accident that could result in death or serious injury.

Defensive driving: Always drive defensively. Anticipate mistakes that other drivers or pedestrians might make and be ready to avoid accidents.

Driver distraction: Always give your full attention to driving. Anything that distracts the driver, such as adjusting controls, talking on a cellular phone or reading can result in a collision with resulting death or serious injury to you, your occupants or others.

General precaution regarding children's safety

Never leave children unattended in the vehicle, and never allow children to have or use the key.

Children may be able to start the vehicle or shift the vehicle into neutral. There is also a danger that children may injure themselves by playing with the windows or other features of the vehicle. In addition, heat build-up or extremely cold temperatures inside the vehicle can be fatal to children.

Not for Reproduction

Reading this manual

WARNING:
Explains something that, if not obeyed, could cause death or serious injury to people.

NOTICE:
Explains something that, if not obeyed, could cause damage to or a malfunction in the vehicle or its equipment.

1 2 3 ··· Indicates operating or working procedures. Follow the steps in numerical order.

Indicates the action (pushing, turning, etc.) used to operate switches and other devices.

Indicates the outcome of an operation (e.g. a lid opens).

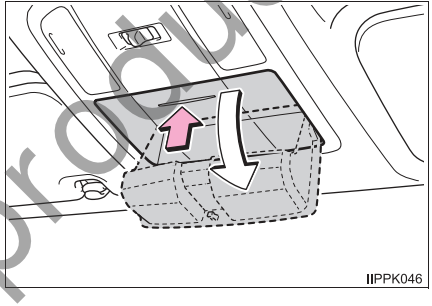

Indicates the component or position being explained.

Means “Do not”, “Do not do this”, or “Do not let this happen”.

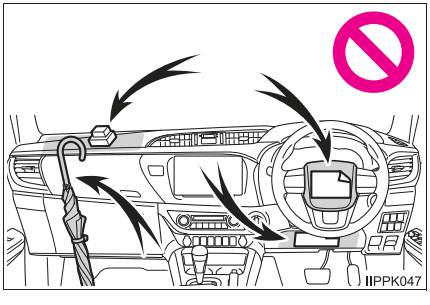

Not for Reproduction

How to search

■ **Searching by name**

- Alphabetical index ..... P. 538

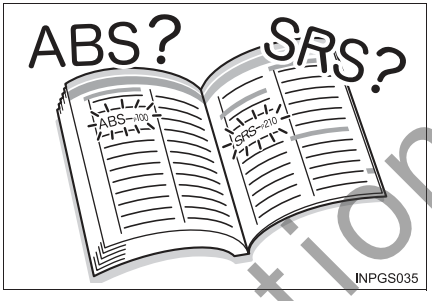

■ **Searching by installation position**

- Pictorial index ..... P. 14

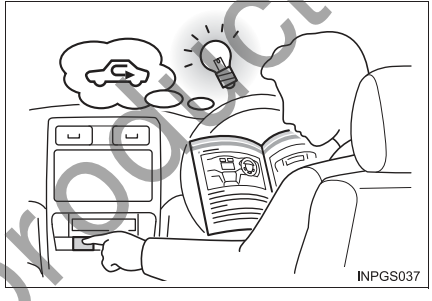

■ **Searching by symptom or sound**

- What to do if... (Troubleshooting) ..... P. 534

■ **Searching by title**

- Table of contents ..... P. 2

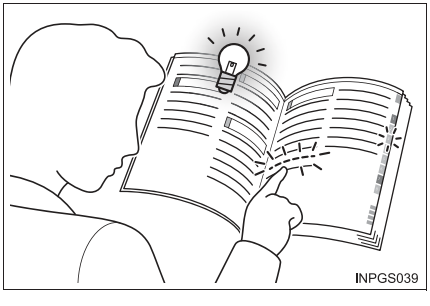

Not for Reproduction

Pictorial index

Exterior

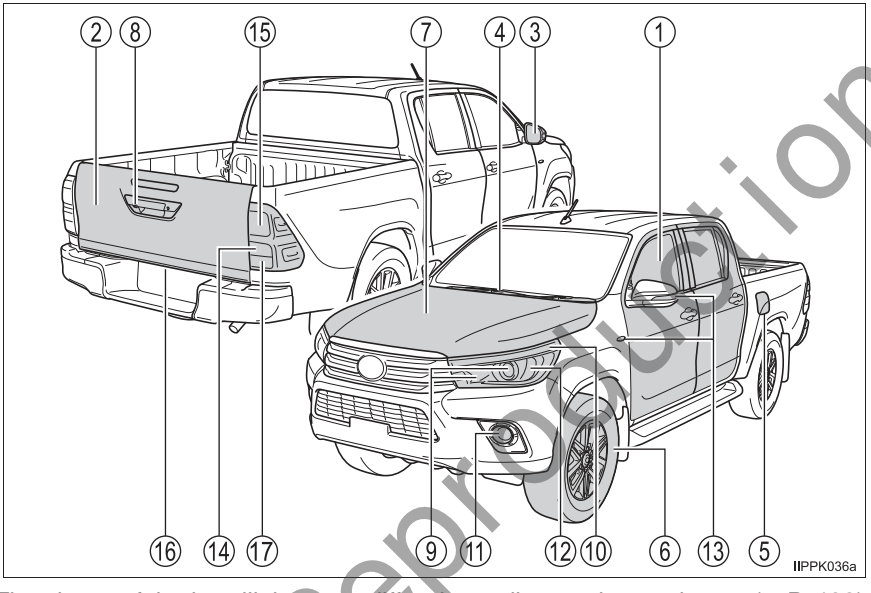

The shape of the headlights may differ depending on the grade etc. (→P. 433)

① **Side doors . . . . . P. 107**
Access panels (smart-cab models only) . . . . . P. 112
Locking/unlocking . . . . . P. 107
Opening/closing the door glasses . . . . . P. 137
Locking/unlocking by using the mechanical key* . . . . . P. 490
Warning lights*1/warning messages*1 . . . . . P. 109, 464

② **Tailgate* . . . . . P. 113**

③ **Outside rear view mirrors . . . . . P. 134**
Adjusting the mirror angle . . . . . P. 134
Folding the mirrors. . . . . P. 135

Not for Reproduction

④ **Windshield wipers . . . . . P. 199**
Precautions against winter season . . . . . P. 250

⑤ **Fuel filler door* . . . . . P. 201**
Refueling method . . . . . P. 201
Fuel type/fuel tank capacity . . . . . P. 513

⑥ **Tires . . . . . P. 416**
Tire size/inflation pressure . . . . . P. 524
Winter tires/tire chain . . . . . P. 250
Checking/rotation . . . . . P. 417
Coping with flat tires . . . . . P. 474

⑦ **Hood . . . . . P. 400**
Opening . . . . . P. 400
Engine oil . . . . . P. 514
Coping with overheat . . . . . P. 499

⑧ **Camera* . . . . . P. 210**

Light bulbs of the exterior lights for driving
(Replacing method: P. 433, Watts: P. 526)

⑨ **Headlights . . . . . P. 194**

⑩ **Front position lights/daytime running lights . . . . . P. 194**

⑪ **Fog lights* . . . . . P. 198**

⑫ **Front turn signal lights . . . . . P. 192**

⑬ **Side turn signal lights (fender-mounted type or mirror-mounted type) . . . . . P. 192**

⑭ **Rear turn signal lights . . . . . P. 192**

⑮ **Stop/tail lights . . . . . P. 194**
Downhill assist control system . . . . . P. 241

⑯ **License plate light . . . . . P. 194**

⑰ **Back-up lights**
Shifting the shift lever to R . . . . . P. 178, 186

Not for Reproduction

*: If equipped

Instrument panel

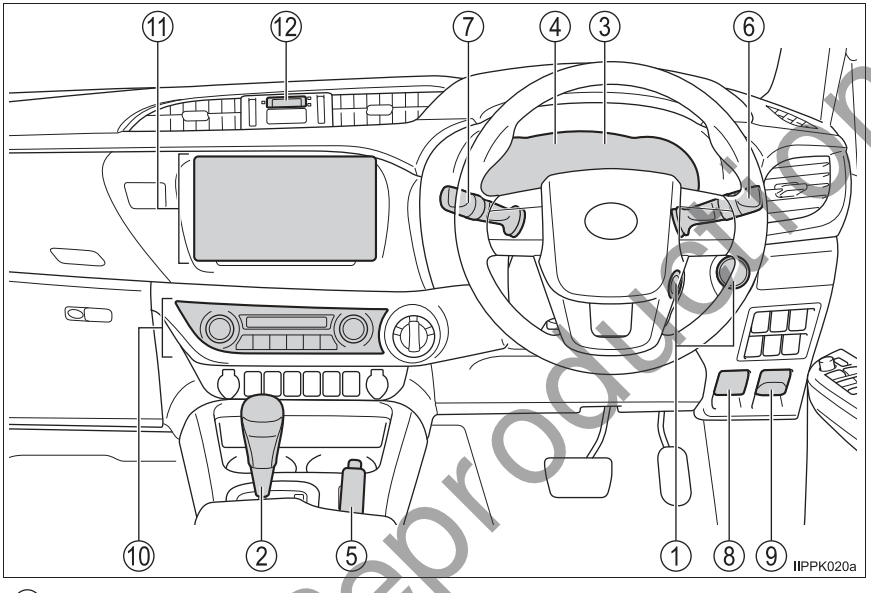

① **Engine switch . . . . . P. 167, 170**
Starting the engine/changing the positions or modes . . . P. 167, 170
Emergency stop of the engine . . . . . P. 451
When the engine will not start . . . . . P. 488
Warning messages*1 . . . . . P. 469

② **Shift lever (Automatic transmission) . . . . . P. 178**
Changing the shift position . . . . . P. 178
Precautions against towing . . . . . P. 453
When the shift lever does not move . . . . . P. 183

Shift lever (Manual transmission) . . . . . P. 186
Changing the shift position . . . . . P. 186
Precautions against towing . . . . . P. 453

Not for Reproduction

③ **Meters . . . . . P. 82**
Reading the meters . . . . . P. 82
Adjusting the instrument panel light*1 . . . . . P. 82
Warning lights/indicator lights . . . . . P. 76
When the warning lights come on . . . . . P. 461

④ **Multi-information display*1 . . . . . P. 87, 91**
When the warning messages are displayed . . . . . P. 469

⑤ **Parking brake lever . . . . . P. 193**
Applying/releasing . . . . . P. 193
Precautions against winter season . . . . . P. 251
Warning light/buzzer . . . . . P. 461

⑥ **Turn signal lever . . . . . P. 192**
Headlight switch . . . . . P. 194
Headlights/front position lights/tail lights/
daytime running lights . . . . . P. 194
Fog lights*1 . . . . . P. 198

⑦ **Windshield wiper and washer switch . . . . . P. 199**
Usage . . . . . P. 199
Adding washer fluid . . . . . P. 414

⑧ **Hood lock release lever . . . . . P. 400**

⑨ **Fuel filler door opener*1 . . . . . P. 203**

⑩ **Manual air conditioning system*1 . . . . . P. 360**
Automatic air conditioning system*1 . . . . . P. 365

⑪ **Multimedia system*1, 2 . . . . . P. 258**
Navigation system*1, 2
Rear view monitor system*1 . . . . . P. 210

⑫ **Clock . . . . . P. 385**

Not for Reproduction

*1: If equipped

*2: Refer to “Navigation and Multimedia System Owner’s Manual”.

Switches

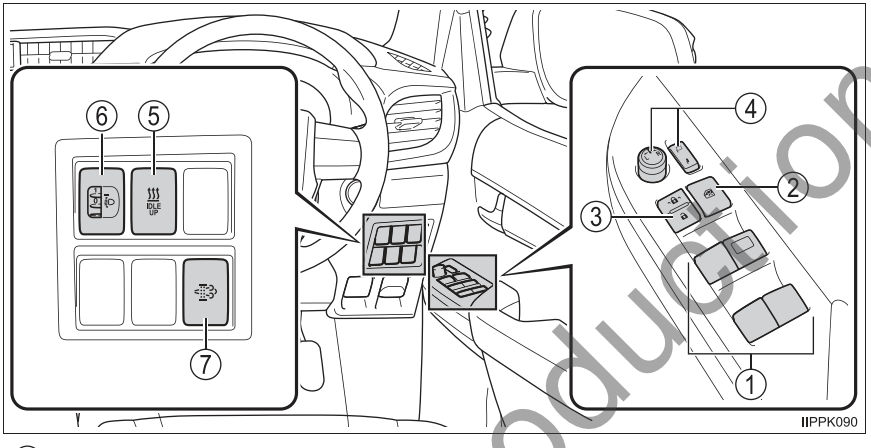

① **Power window switches** . . . . . **P. 137**
② **Window lock switch** . . . . . **P. 138**
③ **Door lock switch** . . . . . **P. 109**
④ **Outside rear view mirror switches** . . . . . **P. 134**
⑤ **Heater idle up switch*1** . . . . . **P. 362, 367**
⑥ **Manual headlight leveling dial*1** . . . . . **P. 195**
⑦ **DPF system switch*1** . . . . . **P. 244**

Not for Reproduction

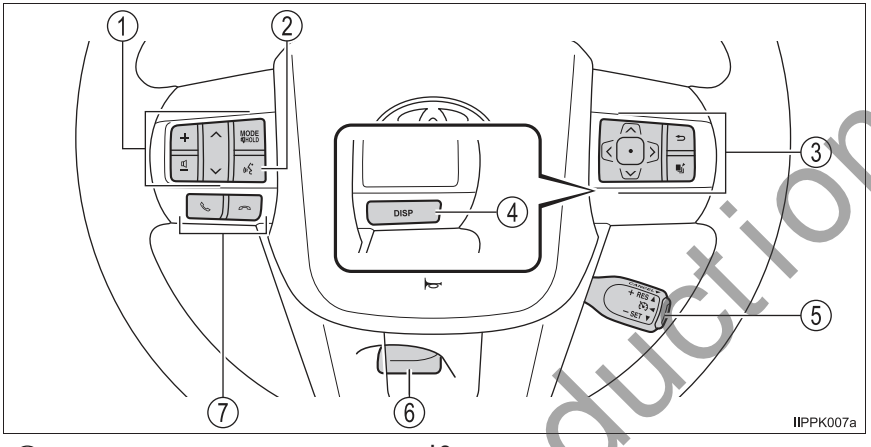

① **Audio remote control switches*2** . . . . . **P. 264**

② **Talk switch*2, 3**

③ **Meter control switches*1** . . . . . **P. 92**

④ **"DISP" button*1** . . . . . **P. 88**

⑤ **Cruise control switch*1** . . . . . **P. 206**

⑥ **Tilt steering lock release lever** . . . . . **P. 131**

⑦ **Telephone switches*2** . . . . . **P. 337**

Not for Reproduction

*1: If equipped

*2: Refer to "Navigation and Multimedia System Owner's Manual".

*3: The switch can not be used depending on the type of audio system or navigation system.

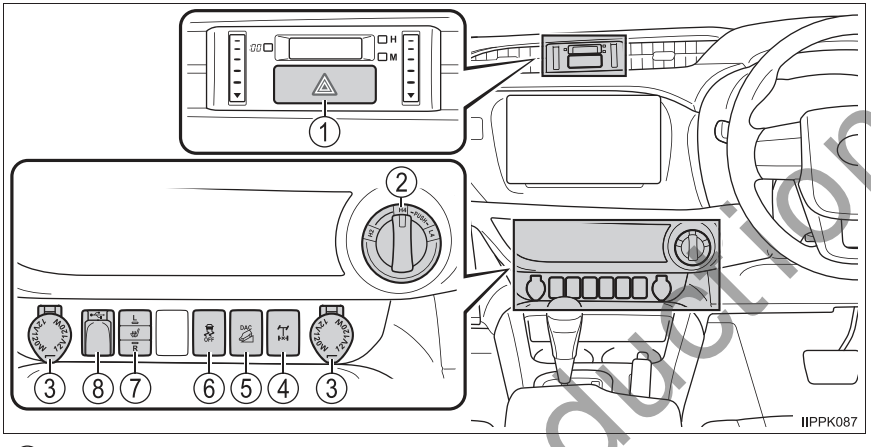

① **Emergency flasher switch** . . . . . **P. 450**
② **Front-wheel drive control switch*1** . . . . . **P. 220**
③ **Power outlets*1** . . . . . **P. 386**
④ **Rear differential lock switch*1** . . . . . **P. 230**
⑤ **“DAC” (Downhill Assist Control system) switch*1** . . . . . **P. 241**
⑥ **VSC OFF switch** . . . . . **P. 235**
⑦ **Seat heater switches*1** . . . . . **P. 372**
⑧ **AUX port/USB port*2** . . . . . **P. 265**

Not for Reproduction

Interior

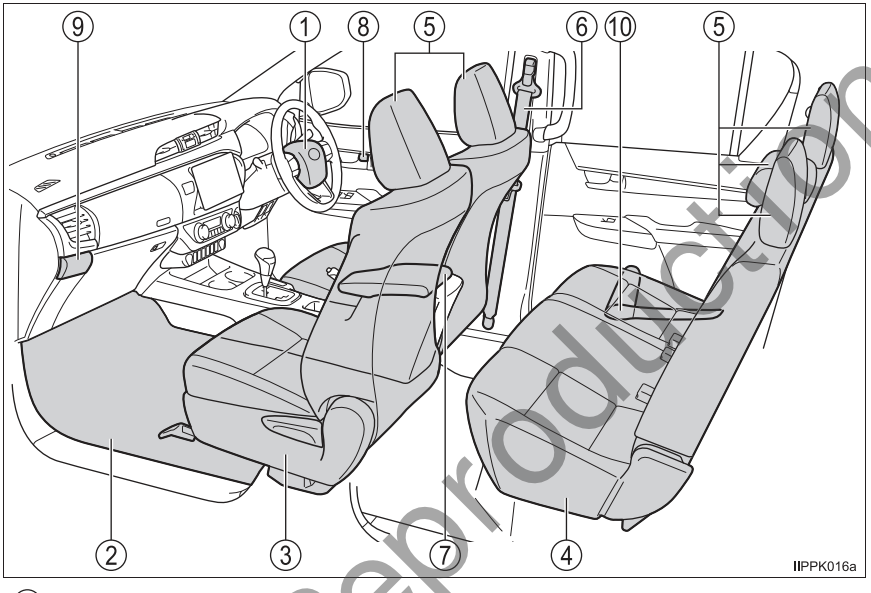

① **SRS airbags** . . . . . **P. 35**
② **Floor mats** . . . . . **P. 26**
③ **Front seats** . . . . . **P. 123**
④ **Rear seats*1** . . . . . **P. 125**
⑤ **Head restraints** . . . . . **P. 128**
⑥ **Seat belts** . . . . . **P. 30**
⑦ **Console box*1** . . . . . **P. 377**
⑧ **Inside lock buttons** . . . . . **P. 109**
⑨ **Cup holders** . . . . . **P. 378**
Auxiliary boxes . . . . . **P. 380**
⑩ **Bottle holders*1** . . . . . **P. 379**

*1: If equipped

*2: Refer to “Navigation and Multimedia System Owner’s Manual”.

Not for Reproduction

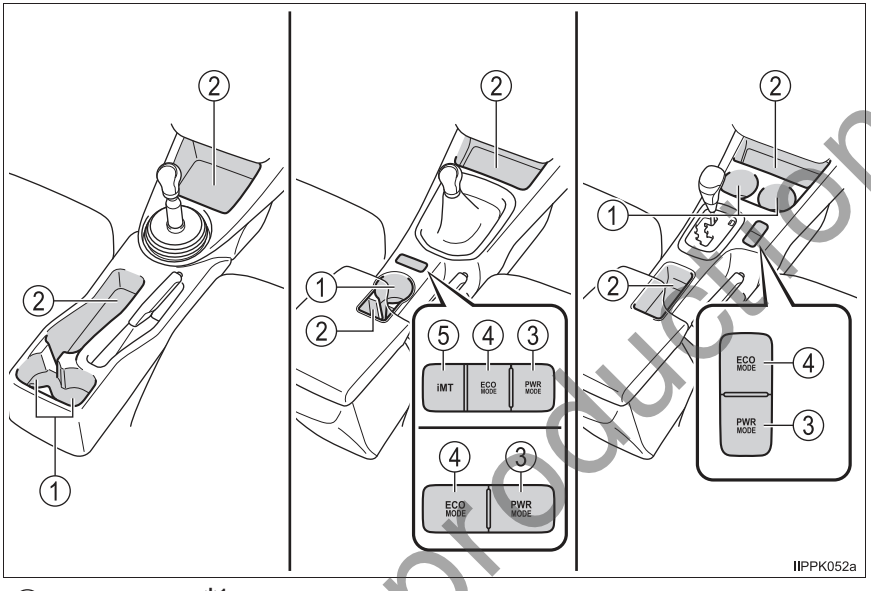

① **Cup holders*1** . . . . . **P. 378**

② **Auxiliary boxes*1** . . . . . **P. 380**

③ **“PWR MODE” switch*1** . . . . . **P. 180, 187**

④ **“ECO MODE” switch*1** . . . . . **P. 180, 187**

⑤ **“iMT” switch*1** . . . . . **P. 188**

Not for Reproduction

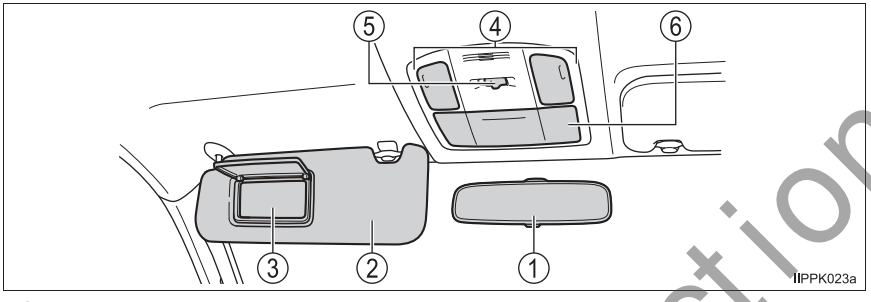

① **Inside rear view mirror** . . . . . **P. 133**

② **Sun visors*2** . . . . . **P. 384**

③ **Vanity mirror*1** . . . . . **P. 384**

④ **Personal lights** . . . . . **P. 374**
Interior lights*1, 3 . . . . . **P. 374**

⑤ **Personal/interior light main switch** . . . . . **P. 374**

⑥ **Auxiliary boxes** . . . . . **P. 380**

Not for Reproduction

*1: If equipped

*2: NEVER use a rearward facing child restraint on a seat protected by an ACTIVE AIRBAG in front of it, DEATH or SERIOUS INJURY to the CHILD can occur. (→P. 53)

*3: The illustration shows the front, but they are also equipped in the rear.

Not for Reproduction

For safety and security

1

1-1. For safe use
Before driving.....26
For safe driving.....28
Seat belts.....30
SRS airbags.....35
Exhaust gas precautions.....45
1-2. Child safety
Riding with children.....46
Child restraint systems.....47
1-3. Theft deterrent system
Engine immobilizer system.....71
Alarm.....73

Not for Reproduction

Before driving

Floor mat

Use only floor mats designed specifically for vehicles of the same model and model year as your vehicle. Fix them securely in place onto the carpet.

1 Insert the retaining hooks (clips) into the floor mat eyelets.

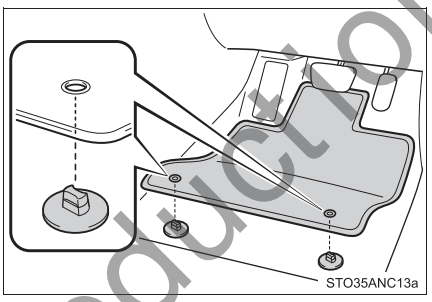

2 Turn the upper knob of each retaining hook (clip) to secure the floor mats in place.

*: Always align the △ marks.

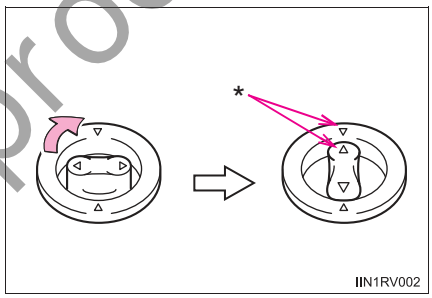

The shape of the retaining hooks (clips) may differ from that shown in the illustration.

Not for Reproduction

WARNING

Observe the following precautions.
Failure to do so may cause the driver's floor mat to slip, possibly interfering with the pedals while driving. An unexpectedly high speed may result or it may become difficult to stop the vehicle. This could lead to an accident, resulting in death or serious injury.

■ **When installing the driver's floor mat**

- Do not use floor mats designed for other models or different model year vehicles, even if they are Toyota Genuine floor mats.
- Only use floor mats designed for the driver's seat.
- Always install the floor mat securely using the retaining hooks (clips) provided.
- Do not use two or more floor mats on top of each other.
- Do not place the floor mat bottom-side up or upside-down.

■ **Before driving**

- Check that the floor mat is securely fixed in the correct place with all the provided retaining hooks (clips). Be especially careful to perform this check after cleaning the floor.
- With the engine stopped and the shift lever in P (automatic transmission) or N (manual transmission), fully depress each pedal to the floor to make sure it does not interfere with the floor mat.

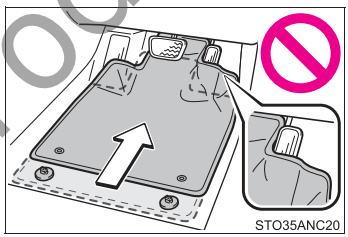

Not for Reproduction

For safe driving

For safe driving, adjust the seat and mirror to an appropriate position before driving.

Correct driving posture

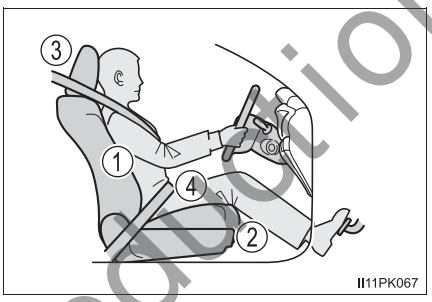

① Adjust the angle of the seat-back so that you are sitting straight up and so that you do not have to lean forward to steer. (→P. 123)

② Adjust the seat so that you can depress the pedals fully and so that your arms bend slightly at the elbow when gripping the steering wheel. (→P. 123)

③ Vehicles with adjustable type head restraint: Lock the head restraint in place with the center of the head restraint closest to the top of your ears. (→P. 128)

④ Wear the seat belt correctly. (→P. 30)

Correct use of the seat belts

Make sure that all occupants are wearing their seat belts before driving the vehicle. (→P. 30)

Use a child restraint system appropriate for the child until the child becomes large enough to properly wear the vehicle's seat belt. (→P. 47)

Not for Reproduction

Adjusting the mirrors

Make sure that you can see backward clearly by adjusting the inside and outside rear view mirrors properly. (→P. 133, 134)

WARNING

Observe the following precautions.
Failure to do so may result in death or serious injury.

- Do not adjust the position of the driver's seat while driving.
  Doing so could cause the driver to lose control of the vehicle.
- Do not place a cushion between the driver or passenger and the seatback.
  A cushion may prevent correct posture from being achieved, and reduce the effectiveness of the seat belt and head restraint.
- Do not place anything under the front seats.
  Objects placed under the front seats may become jammed in the seat tracks and stop the seat from locking in place. This may lead to an accident and the adjustment mechanism may also be damaged.
- Always observe the legal speed limit when driving on public roads.
- When driving over long distances, take regular breaks before you start to feel tired.
  Also, if you feel tired or sleepy while driving, do not force yourself to continue driving and take a break immediately.

Not for Reproduction

Seat belts

Make sure that all occupants are wearing their seat belts before driving the vehicle.

Correct use of the seat belts

- Extend the shoulder belt so that it comes fully over the shoulder, but does not come into contact with the neck or slide off the shoulder.
- Position the lap belt as low as possible over the hips.
- Adjust the position of the seat-back. Sit up straight and well back in the seat.
- Do not twist the seat belt.

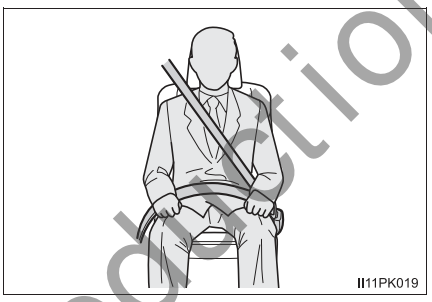

Fastening and releasing the seat belt

① To fasten the seat belt, push the plate into the buckle until a click sound is heard.

② To release the seat belt, press the release button.

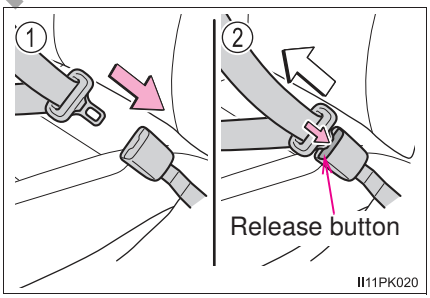

Not for Reproduction

Adjusting the seat belt shoulder anchor height (if equipped for front seats)

① Push the seat belt shoulder anchor down while pulling the lock release knob.

② Push the seat belt shoulder anchor up.

Move the height adjuster up and down as needed until you hear a click.

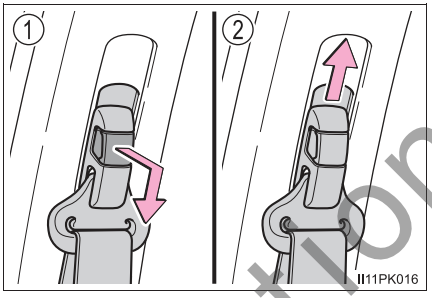

Seat belt pretensioners (front seats)

The pretensioners help the seat belts to quickly restrain the occupants by retracting the seat belts when the vehicle is subjected to certain types of severe frontal or side collision.

The pretensioners do not activate in the event of a minor frontal impact, a minor side impact, a rear impact or a vehicle rollover.

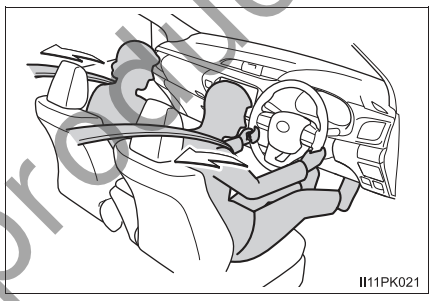

Not for Reproduction

Emergency locking retractor (ELR)

The retractor will lock the belt during a sudden stop or on impact. It may also lock if you lean forward too quickly. A slow, easy motion will allow the belt to extend so that you can move around fully.

Child seat belt usage

The seat belts of your vehicle were principally designed for persons of adult size.

- Use a child restraint system appropriate for the child, until the child becomes large enough to properly wear the vehicle's seat belt. (→P. 47)
- When the child becomes large enough to properly wear the vehicle's seat belt, follow the instructions regarding seat belt usage. (→P. 30)

Replacing the belt after the pretensioner has been activated (front seats)

If the vehicle is involved in multiple collisions, the pretensioner will activate for the first collision, but will not activate for the second or subsequent collisions.

Seat belt regulations

If seat belt regulations exist in the country where you reside, please contact your Toyota dealer for seat belt replacement or installation.

Not for Reproduction

WARNING

Observe the following precautions to reduce the risk of injury in the event of sudden braking, sudden swerving or an accident.
Failure to do so may cause death or serious injury.

■ **Wearing a seat belt**

- Ensure that all passengers wear a seat belt.
- Always wear a seat belt properly.
- Each seat belt should be used by one person only. Do not use a seat belt for more than one person at once, including children.
- Toyota recommends that children be seated in the rear seat and always use a seat belt and/or an appropriate child restraint system.
- To achieve a proper seating position, do not recline the seat more than necessary. The seat belt is most effective when the occupants are sitting up straight and well back in the seats.
- Do not wear the shoulder belt under your arm.
- Always wear your seat belt low and snug across your hips.

■ **Pregnant women**

Obtain medical advice and wear the seat belt in the proper way. (→P. 30)

Women who are pregnant should position the lap belt as low as possible over the hips in the same manner as other occupants, extending the shoulder belt completely over the shoulder and avoiding belt contact with the rounding of the abdominal area.

If the seat belt is not worn properly, not only the pregnant woman, but also the fetus could suffer death or serious injury as a result of sudden braking or a collision.

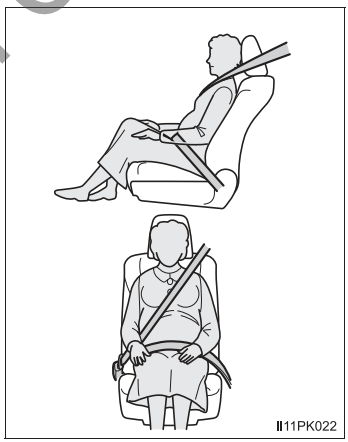

■ **People suffering illness**

Obtain medical advice and wear the seat belt in the proper way. (→P. 30)

Not for Reproduction

WARNING

■ **When children are in the vehicle**

→P. 61

■ **Seat belt pretensioners (front seats)**

If the pretensioner has activated, the SRS warning light will come on. In that case, the seat belt cannot be used again and must be replaced at your Toyota dealer.

■ **Adjustable shoulder anchor (if equipped)**

Always make sure the shoulder belt is positioned across the center of your shoulder. The belt should be kept away from your neck, but not falling off your shoulder. Failure to do so could reduce the amount of protection in an accident and cause death or serious injuries in the event of a sudden stop, sudden swerve or accident. (→P. 31)

■ **Seat belt damage and wear**

- Do not damage the seat belts by allowing the belt, plate, or buckle to be jammed in the door.
- Inspect the seat belt system periodically. Check for cuts, fraying, and loose parts. Do not use a damaged seat belt until it is replaced. Damaged seat belts cannot protect an occupant from death or serious injury.
- Ensure that the belt and plate are locked and the belt is not twisted.
  If the seat belt does not function correctly, immediately contact your Toyota dealer.
- Replace the seat assembly, including the belts, if your vehicle has been involved in a serious accident, even if there is no obvious damage.
- Do not attempt to install, remove, modify, disassemble or dispose of the seat belts. Have any necessary repairs carried out by your Toyota dealer. Inappropriate handling may lead to incorrect operation.

Not for Reproduction

SRS airbags

The SRS airbags inflate when the vehicle is subjected to certain types of severe impacts that may cause significant injury to the occupants. They work together with the seat belts to help reduce the risk of death or serious injury.

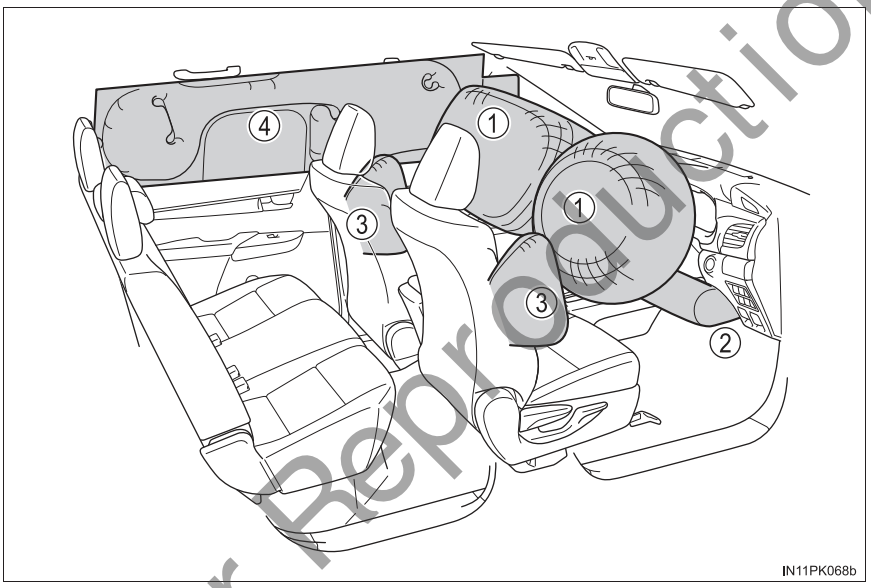

◆ SRS front airbags

① SRS driver airbag/front passenger airbag
Can help protect the head and chest of the driver and front passenger from impact with interior components

② SRS driver's knee airbag
Can help provide driver protection

◆ SRS side and curtain shield airbags

③ SRS side airbags
Can help protect the torso of the front seat occupants

④ SRS curtain shield airbags
Can help protect primarily the head of occupants in the outer seats

Not for Reproduction

SRS airbag system components

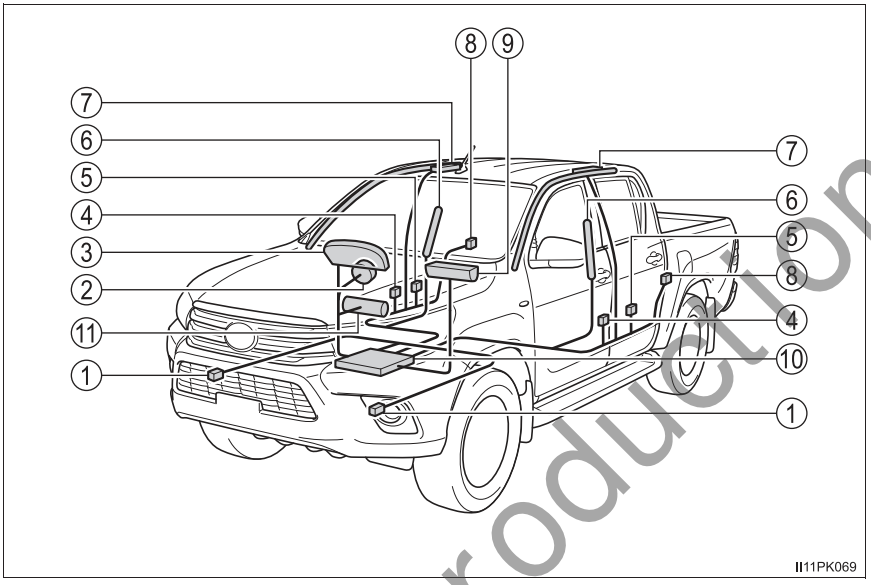

① Front impact sensors
② Driver airbag
③ SRS warning light
④ Side impact sensors (front door)
⑤ Seat belt pretensioners and force limiters
⑥ Side airbags
⑦ Curtain shield airbags
⑧ Side impact sensors (rear)
⑨ Front passenger airbag
⑩ Airbag sensor assembly
⑪ Driver's knee airbag

The main SRS airbag system components are shown above. The SRS airbag system is controlled by the airbag sensor assembly. As the airbags deploy, a chemical reaction in the inflators quickly fills the airbags with non-toxic gas to help restrain the motion of the occupants.

Not for Reproduction

WARNING

■ **SRS airbag precautions**

Observe the following precautions regarding the SRS airbags.
Failure to do so may cause death or serious injury.

- The driver and all passengers in the vehicle must wear their seat belts properly.
  The SRS airbags are supplemental devices to be used with the seat belts.
- The SRS driver airbag deploys with considerable force, and can cause death or serious injury especially if the driver is very close to the airbag.

  Since the risk zone for the driver's airbag is the first 50 - 75 mm (2 - 3 in.) of inflation, placing yourself 250 mm (10 in.) from your driver airbag provides you with a clear margin of safety. This distance is measured from the center of the steering wheel to your breastbone. If you sit less than 250 mm (10 in.) away now, you can change your driving position in several ways:
  - Move your seat to the rear as far as you can while still reaching the pedals comfortably.
  - Slightly recline the back of the seat. Although vehicle designs vary, many drivers can achieve the 250 mm (10 in.) distance, even with the driver seat all the way forward, simply by reclining the back of the seat somewhat. If reclining the back of your seat makes it hard to see the road, raise yourself by using a firm, non-slippery cushion, or raise the seat if your vehicle has that feature.
  - If your steering wheel is adjustable, tilt it downward. This points the airbag toward your chest instead of your head and neck.

  The seat should be adjusted as recommended above, while still maintaining control of the foot pedals, steering wheel, and your view of the instrument panel controls.
- The SRS front passenger airbag also deploys with considerable force, and can cause death or serious injury especially if the front passenger is very close to the airbag. The front passenger seat should be as far from the airbag as possible with the seatback adjusted, so the front passenger sits upright.
- Improperly seated and/or restrained infants and children can be killed or seriously injured by a deploying airbag. An infant or child who is too small to use a seat belt should be properly secured using a child restraint system. Toyota strongly recommends that all infants and children be placed in the rear seats (if equipped) of the vehicle and properly restrained. The rear seats (if equipped) are safer for infants and children than the front passenger seat. (→P. 47)

Not for Reproduction

WARNING

■ **SRS airbag precautions**

- Do not sit on the edge of the seat or lean against the dashboard.

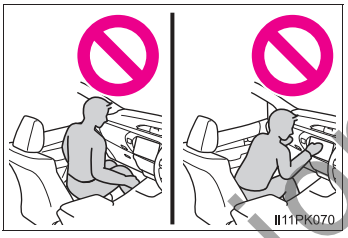

- Do not allow a child to stand in front of the SRS front passenger airbag unit or sit on the knees of a front passenger.
- Do not allow the front seat occupants to hold items on their knees.

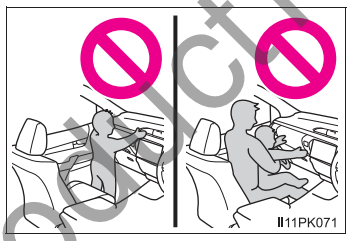

- Do not lean against the door, the roof side rail or the front, side and rear pillars.

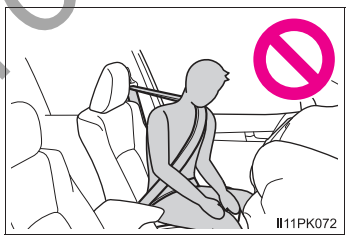

- Do not allow anyone to kneel on the passenger seat toward the door or put their head or hands outside the vehicle.

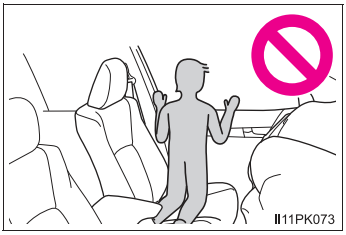

Not for Reproduction

WARNING

■ **SRS airbag precautions**

● Do not attach anything to or lean anything against areas such as the dashboard, steering wheel pad and lower portion of the instrument panel.

These items can become projectiles when the SRS driver, front passenger and knee airbags deploy.

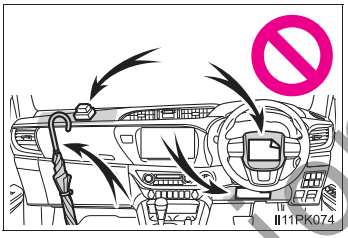

● Do not attach anything to areas such as a door, windshield glass, side door glass, front or rear pillar, roof side rail and assist grip.

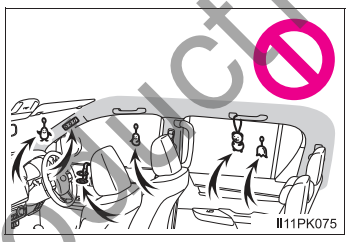

● Vehicles without smart entry & start system: Do not attach any heavy, sharp or hard objects such as keys or accessories to the key. The objects may restrict the SRS knee airbag inflation or be thrust into the driver's seat area by the force of the deploying airbag, thus causing a danger.

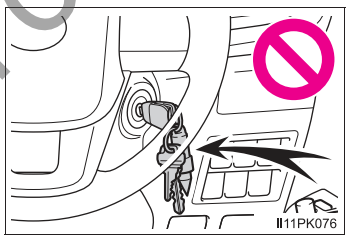

● Do not hang coat hangers or other hard objects on the coat hooks. All of these items could become projectiles and may cause death or serious injury, should the SRS curtain shield airbags deploy.

● If the vinyl cover is put on the area where the SRS knee airbag will deploy, be sure to remove it.

● Do not use seat accessories which cover the parts where the SRS side airbags inflate as they may interfere with inflation of the airbags. Such accessories may prevent the side airbags from activating correctly, disable the system or cause the side airbags to inflate accidentally, resulting in death or serious injury.

Not for Reproduction

WARNING

■ **SRS airbag precautions**

- Do not strike or apply significant levels of force to the area of the SRS airbag components.
  Doing so can cause the SRS airbags to malfunction.
- Do not touch any of the component parts immediately after the SRS airbags have deployed (inflated) as they may be hot.
- If breathing becomes difficult after the SRS airbags have deployed, open a door or window to allow fresh air in, or leave the vehicle if it is safe to do so. Wash off any residue as soon as possible to prevent skin irritation.
- If the areas where the SRS airbags are stored, such as the steering wheel pad and front and rear pillar garnishes, are damaged or cracked, have them replaced by your Toyota dealer.

■ **Modification and disposal of SRS airbag system components**

Do not dispose of your vehicle or perform any of the following modifications without consulting your Toyota dealer. The SRS airbags may malfunction or deploy (inflate) accidentally, causing death or serious injury.

- Installation, removal, disassembly and repair of the SRS airbags
- Repairs, modifications, removal or replacement of the steering wheel, instrument panel, dashboard, seats or seat upholstery, front, side and rear pillars or roof side rails
- Repairs or modifications of the front fender, front bumper, or side of the occupant compartment
- Installation of a grille guard (bull bars, kangaroo bar, etc.), snow plows or winches
- Modifications to the vehicle's suspension system
- Installation of electronic devices such as mobile two-way radios (RF-transmitter) and CD players

Not for Reproduction

■ **If the SRS airbags deploy (inflate)**

- Slight abrasions, burns, bruising etc., may be sustained from SRS airbags, due to the extremely high speed deployment (inflation) by hot gases.
- A loud noise and white powder will be emitted.
- Parts of the airbag module (steering wheel hub, airbag cover and inflator) as well as the front seats, parts of the front and rear pillars, and roof side rails, may be hot for several minutes. The airbag itself may also be hot.
- The windshield may crack.

■ **SRS airbag deployment conditions (SRS front airbags)**

- The SRS front airbags will deploy in the event of an impact that exceeds the set threshold level (the level of force corresponding to an approximately 20 - 30 km/h [12 - 18 mph] frontal collision with a fixed wall that does not move or deform).

  However, this threshold velocity will be considerably higher in the following situations:

  - If the vehicle strikes an object, such as a parked vehicle or sign pole, which can move or deform on impact
  - If the vehicle is involved in an underride collision, such as a collision in which the front of the vehicle “underrides”, or goes under, the bed of a truck
- Depending on the type of collision, it is possible that only the seat belt pre-tensioners will activate.

■ **SRS airbag deployment conditions (SRS side and curtain shield airbags)**

- The SRS side and curtain shield airbags will deploy in the event of an impact that exceeds the set threshold level (the level of force corresponding to the impact force produced by an approximately 1500 kg [3300 lb.] vehicle colliding with the vehicle cabin from a direction perpendicular to the vehicle orientation at an approximate speed of 20 - 30 km/h [12 - 18 mph]).
- The SRS side and curtain shield airbags may also deploy in the event of a severe frontal collision.

Not for Reproduction

■Conditions under which the SRS airbags may deploy (inflate), other than a collision

The SRS front airbags, SRS side and curtain shield airbags may also deploy if a serious impact occurs to the underside of your vehicle. Some examples are shown in the illustration.

- Hitting a curb, edge of pavement or hard surface
- Falling into or jumping over a deep hole
- Landing hard or falling

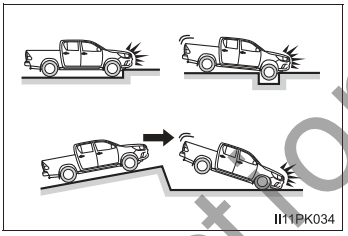

■Types of collisions that may not deploy the SRS airbags (SRS front airbags)

The SRS front airbags do not generally inflate if the vehicle is involved in a side or rear collision, if it rolls over, or if it is involved in a low-speed frontal collision. But, whenever a collision of any type causes sufficient forward deceleration of the vehicle, deployment of the SRS front airbags may occur.

- Collision from the side
- Collision from the rear
- Vehicle rollover

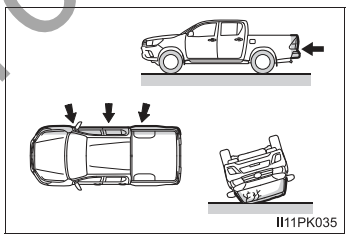

Not for Reproduction

Types of collisions that may not deploy the SRS airbags (SRS side and curtain shield airbags)

The SRS side and curtain shield airbags may not activate if the vehicle is subjected to a collision from the side at certain angles, or a collision to the side of the vehicle body other than the passenger compartment.

- Collision from the side to the vehicle body other than the passenger compartment
- Collision from the side at an angle

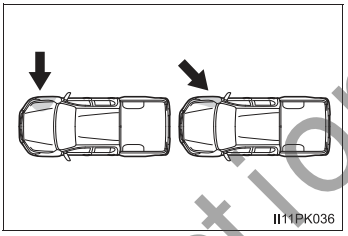

The SRS side and curtain shield airbags do not generally inflate if the vehicle is involved in a rear collision, if it rolls over, or if it is involved in a low-speed side or low-speed frontal collision.

- Collision from the rear
- Vehicle rollover

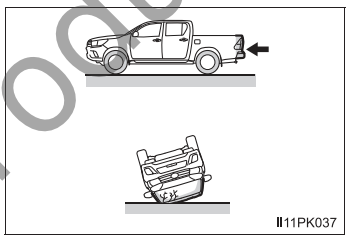

When to contact your Toyota dealer

In the following cases, the vehicle will require inspection and/or repair. Contact your Toyota dealer as soon as possible.

- Any of the SRS airbags have been inflated.
- The front of the vehicle is damaged or deformed, or was involved in an accident that was not severe enough to cause the SRS airbags to inflate.

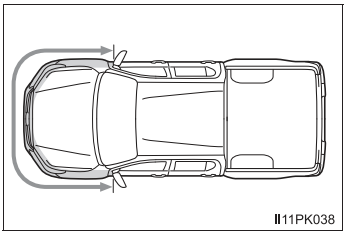

Not for Reproduction

- A portion of a door or its surrounding area is damaged or deformed, or the vehicle was involved in an accident that was not severe enough to cause the SRS side and curtain shield airbags to inflate.

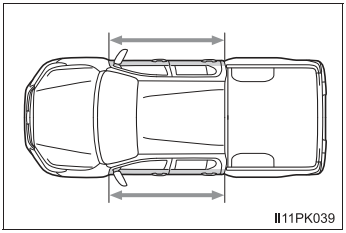

- The pad section of the steering wheel, dashboard near the front passenger airbag cover or lower portion of the instrument panel is scratched, cracked, or otherwise damaged.

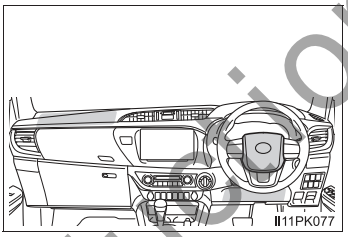

- The surface of the seats with the side airbag is scratched, cracked, or otherwise damaged.

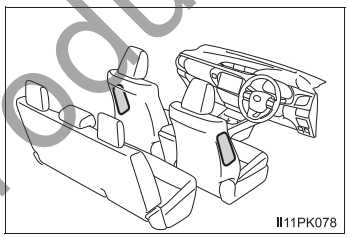

- The portion of the front pillars, rear pillars or roof side rail garnishes (padding) containing the curtain shield airbags inside is scratched, cracked, or otherwise damaged.

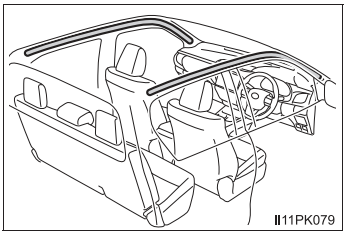

Not for Reproduction

Exhaust gas precautions

Harmful substance to the human body is included in exhaust gases if inhaled.

WARNING

Exhaust gases include harmful carbon monoxide (CO), which is colorless and odorless. Observe the following precautions.
Failure to do so may cause exhaust gases enter the vehicle and may lead to an accident caused by light-headedness, or may lead to death or a serious health hazard.

■ Important points while driving

If you smell exhaust gases in the vehicle, open the windows and have the vehicle inspected at your Toyota dealer as soon as possible.

■ When parking

- If the vehicle is in a poorly ventilated area or a closed area, such as a garage, stop the engine.
- Do not leave the vehicle with the engine running for a long time.
  If such a situation cannot be avoided, park the vehicle in an open space and ensure that exhaust fumes do not enter the vehicle interior.
- Do not leave the engine running in an area with snow build-up, or where it is snowing. If snowbanks build up around the vehicle while the engine is running, exhaust gases may collect and enter the vehicle.

■ Exhaust pipe

The exhaust system needs to be checked periodically. If there is a hole or crack caused by corrosion, damage to a joint or abnormal exhaust noise, be sure to have the vehicle inspected and repaired by your Toyota dealer.

Not for Reproduction

Riding with children

Observe the following precautions when children are in the vehicle.
Use a child restraint system appropriate for the child, until the child becomes large enough to properly wear the vehicle's seat belt.

- It is recommended that children sit in the rear seats (if equipped) to avoid accidental contact with the shift lever, wiper switch etc.
- Use the rear door child-protector lock (double-cab models only) or the window lock switch to avoid children opening the door while driving or operating the power window accidentally.
- Do not let small children operate equipment which may catch or pinch body parts, such as the power window, hood, tailgate (if equipped), seats etc.

WARNING

Never leave children unattended in the vehicle, and never allow children to have or use the key.

Children may be able to start the vehicle or shift the vehicle into neutral. There is also a danger that children may injure themselves by playing with the windows or other features of the vehicle. In addition, heat build-up or extremely cold temperatures inside the vehicle can be fatal to children.

Not for Reproduction

Child restraint systems

Before installing a child restraint system in the vehicle, there are precautions that need to be observed, different types of child restraint systems, as well as installation methods, etc., written in this manual.

Use a child restraint system when riding with a small child that can not properly use a seat belt. For the child's safety, install the child restraint system to a rear seat. Be sure to follow the installation method that is in the operation manual enclosed with the restraint system.

Table of contents

Points to remember ..... P. 47
Child restraint system ..... P. 49
When using a child restraint system ..... P. 52
Child restraint system installation method
- Fixed with a seat belt ..... P. 55
- Fixed with an ISOFIX rigid anchor ..... P. 62
- Using a child restraint anchor fitting ..... P. 68

Points to remember

- Prioritize and observe the warnings, as well as the laws and regulations for child restraint systems.
- Choose a child restraint system that suits your vehicle and is appropriate to the age and size of the child.
- Use a child restraint system appropriate for the child until the child becomes large enough to properly wear the vehicle's seat belt.

Not for Reproduction

WARNING

■ **When a child is riding**

Observe the following precautions.
Failure to do so may result in death or serious injury.

- For effective protection in automobile accidents and sudden stops, a child must be properly restrained, using a seat belt or child restraint system depending on the age and size of the child.
- Toyota strongly urges the use of a proper child restraint system that conforms to the size of the child, installed on the rear seat. According to accident statistics, the child is safer when properly restrained in the rear seat than in the front seat.
- Holding a child in your or someone else's arms is not a substitute for a child restraint system. In an accident, the child can be crushed against the windshield or between the holder and the interior of the vehicle.

■ **Handling the child restraint system**

If the child restraint system is not properly fixed in place, the child or other passengers may be seriously injured or even killed in the event of sudden braking, sudden swerving, or an accident.

- If the vehicle were to receive a strong impact from an accident, etc., it is possible that the child restraint system has damage that is not readily visible. In such cases, do not reuse the restraint system.
- Depending on the child restraint system, installation may be difficult or impossible. In those cases, check whether the child restraint system is suitable for installment in the vehicle. (→P. 55, 62) Be sure to install and observe the usage rules after carefully reading the child restraint system fixing method in this manual, as well as the operation manual enclosed with the child restraint system.
- Keep the child restraint system properly secured on the seat even if it is not in use. Do not store the child restraint system unsecured in the passenger compartment.
- If it is necessary to detach the child restraint system, remove it from the vehicle.

Not for Reproduction

Child restraint system

Install the available child restraint system in vehicle upon confirming the following items.

■ Standards for child restraint systems

Use a child restraint system that conforms to ECE R44*1 or ECE R129*1, 2.

The following approval mark is displayed on child restraint systems which are conformed.

Check for an approval mark attached to the child restraint system.

Example of the displayed regulation number

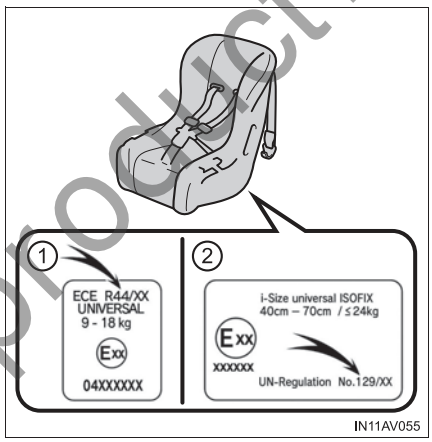

① ECE R44 approval mark*3
The weight range of the child who is applicable for an ECE R44 approval mark is indicated.

② ECE R129 approval mark*3
The height range of the child who is applicable as well as available weights for an ECE R129 approval mark is indicated.

*1: ECE R44 and ECE R129 are U.N. regulations for child restraint systems.

*2: The child restraint systems mentioned in the table may not be available outside of the EU area.

*3: The displayed mark may differ depending on the product.

Not for Reproduction

■ Mass group (ECE R44 only)

This Mass group table is required when confirming the child restraint system compatibility. Confirm in accordance with the child restraint system compatibility table. (→P. 55, 64)

The child restraint system which conforms to the standard of ECE R44 is categorized into 5 groups according to the weight of the child.

Mass group	Child weight	Reference age*
Group 0	until 10 kg (22 lb.)	about 9 months
Group 0+	until 13 kg (28 lb.)	about 1.5 years
Group I	9 - 18 kg (20 to 39 lb.)	from 9 months - about 4 years
Group II	15 - 25 kg (34 to 55 lb.)	from 3 years - about 7 years
Group III	22 - 36 kg (49 to 79 lb.)	from 6 years - about 12 years

*: The age range is a standard approximation. Choose according to the weight of the child.

Not for Reproduction

■ Types of child restraint system installation methods

Confirm with the operation manual enclosed with the child restraint system about the instruction of the child restraint system.

Installation method		Page
Seat belt attachment	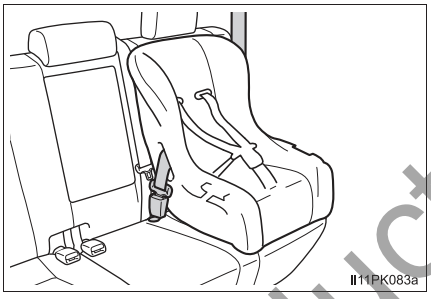	P. 55
ISOFIX rigid anchor attachment	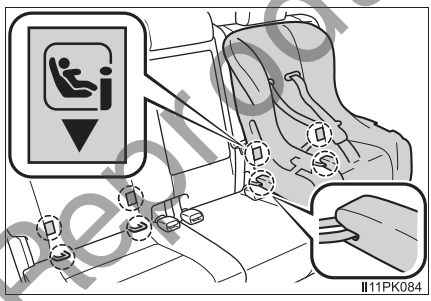	P. 62
Child restraint anchor fitting attachment	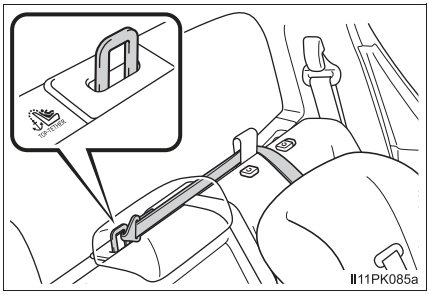	P. 68

Not for Reproduction

When using a child restraint system

■ When installing a child restraint system to a passenger seat

For the safety of a child, install child restraint systems to a rear seats. When installing child restraint system to a front passenger seat is unavoidable, adjust the passenger seat as follows and install the child restraint system.

- Adjust the seatback to the most upright position
- Move the front seat fully rearward
- If the head restraint interferes with your child restraint system, and the head restraint can be removed, remove the head restraint. Otherwise, put the head restraint in the upper most position.

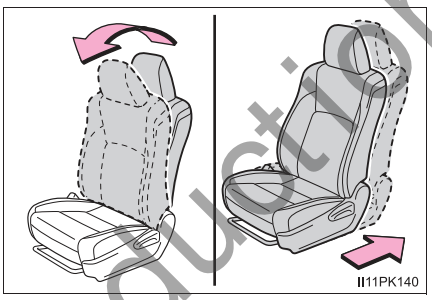

Not for Reproduction

WARNING

■ **When using a child restraint system**

Observe the following precautions.
Failure to do so may result in death or serious injury.

● Extreme Hazard! Do not use a rearward facing child restraint on a seat protected by an airbag in front of it! This is because the force of the rapid inflation of the front passenger airbag can cause death or serious injury to the child.

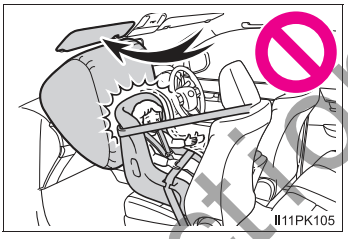

There is a label(s) on the passenger side sun visor, indicating it is forbidden to attach a rear-facing child restraint system to the front passenger seat. Details of the label(s) are shown in the illustration below.

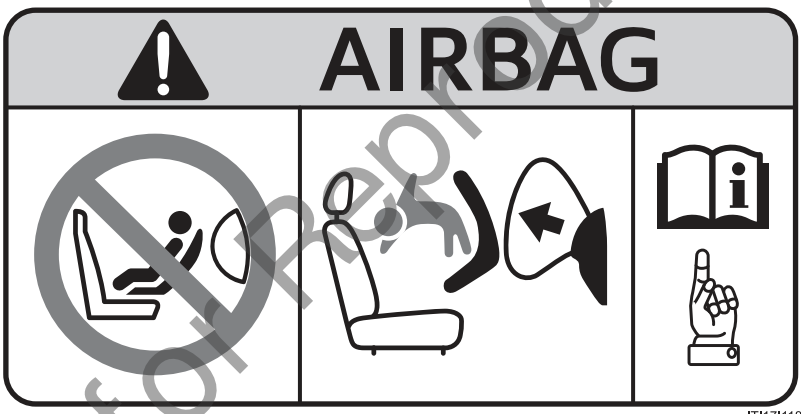

ITI17I118a

Not for Reproduction

WARNING

■ **When using a child restraint system**

- Only put a forward-facing child restraint system on the front seat when unavoidable. When installing a forward-facing child restraint on the front passenger seat, move the seat as far back as possible. Failing to do so may result in death or serious injury if the airbags deploy (inflate).

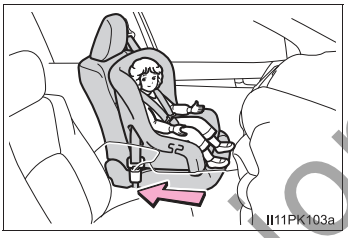

- Do not allow the child to lean his/her head or any part of his/her body against the door or the area of the seat, front or rear pillars, or roof side rails from which the SRS side airbags or SRS curtain shield airbags deploy even if the child is seated in the child restraint system. It is dangerous if the SRS side airbags and curtain shield airbags inflate, and the impact could cause death or serious injury to the child.
- When a junior seat (booster seat) is installed, always ensure that the shoulder belt is positioned across the center of the child's shoulder. The belt should be kept away from the child's neck, but not so that it could fall off the child's shoulder.
- Use child restraint system suitable to the age and size of the child and install it to the rear seat.
- Double-cab models: If the driver's seat interferes with the child restraint system and prevents it from being attached correctly, attach the child restraint system to the left-hand rear seat.
- Double-cab models: Adjust the front passenger seat so that it does not interfere with the child restraint system.

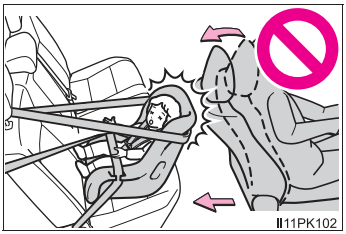

Not for Reproduction

Child restraint system fixed with a seat belt

The child restraint system suitability table (→P. 55), with symbols, displays the types of usable child restraint systems and possible seating position installation for the child restraint system owned by the customer. Confirm also in accordance with [Confirming the possible installation seating positions and the Mass Group for the seat belt installation type child restraint systems].

◆ Confirming the possible installation seating positions and the Mass Group for the seat belt installation type child restraint systems

1. Confirm the corresponding [Mass group] from the weight of the child (→P. 50)

   (Ex. 1) When the weight is 12 kg, [Mass group 0+]

   (Ex. 2) When the weight is 15 kg, [Mass group I]

2. Confirm and select the appropriate possible seating position for the child restraint system and the corresponding type of system from the [Child restraint systems fastened with SEAT BELT - Compatibility table]. (→P. 55)

◆ Child restraint systems fastened with SEAT BELT - Compatibility table

If your child restraint system is of “universal” category, you can install it on the positions mentioned by U or UF in the table below (UF is for forward-facing child restraint systems only). Child restraint systems category and mass group can be found in the child restraint system manual.

If your child restraint system is not of the “universal” category (or if you cannot find information in the table below), please refer to the child restraint system “vehicle list” for compatibility information or ask the retailer of your child seat.

Not for Reproduction

▶ Single-cab models

Mass groups	Seating position
	Front passenger seat
0 Up to 10 kg (22 lb.)	X
0+ Up to 13 kg (28 lb.)	X
I 9 to 18 kg (20 to 39 lb.)	Rearward-facing — X
	Forward-facing — UF*1, 2
II, III 15 to 36 kg (34 to 79 lb.)	UF*1, 2

Key of letters inserted in the above table:

X: Not suitable seat position for children in this mass group.

U: Suitable for “universal” category child restraint systems approved for use in this mass group.

UF: Suitable for forward-facing “universal” category child restraint systems approved for use in this mass group.

*1: Adjust the seatback angle to the most upright position. Move the front seat fully rearward. If the passenger seat height can be adjusted, move it to the upper most position.

*2: If the head restraint interferes with your child restraint system, and the head restraint can be removed, remove the head restraint. Otherwise, put the head restraint in the upper most position.

Not for Reproduction

▶ Smart-cab models

Mass groups	Seating position	
	Front passenger seat	Rear seat
0 Up to 10 kg (22 lb.)	X	X
0+ Up to 13 kg (28 lb.)	X	X
I 9 to 18 kg (20 to 39 lb.)	Rearward-facing — X	X
	Forward-facing — UF*1, 2	
II, III 15 to 36 kg (34 to 79 lb.)	UF*1, 2	X

Key of letters inserted in the above table:

X: Not suitable seat position for children in this mass group.

U: Suitable for “universal” category child restraint systems approved for use in this mass group.

UF: Suitable for forward-facing “universal” category child restraint systems approved for use in this mass group.

*1: Adjust the seatback angle to the most upright position. Move the front seat fully rearward. If the passenger seat height can be adjusted, move it to the upper most position.

*2: If the head restraint interferes with your child restraint system, and the head restraint can be removed, remove the head restraint. Otherwise, put the head restraint in the upper most position.

Not for Reproduction

▶ Double-cab models

Mass groups	Seating position		
	Front passenger seat	Rear seat	
		Outboard	Center
0 Up to 10 kg (22 lb.)	X	U	X
0+ Up to 13 kg (28 lb.)	X	U	X
I 9 to 18 kg (20 to 39 lb.)	Rearward-facing — X	U*2	X
	Forward-facing — UF*1, 2		
II, III 15 to 36 kg (34 to 79 lb.)	UF*1, 2	U*2	X

Key of letters inserted in the above table:

X: Not suitable seat position for children in this mass group.

U: Suitable for “universal” category child restraint systems approved for use in this mass group.

UF: Suitable for forward-facing “universal” category child restraint systems approved for use in this mass group.

*1: Adjust the seatback angle to the most upright position. Move the front seat fully rearward. If the passenger seat height can be adjusted, move it to the upper most position.

*2: If the head restraint interferes with your child restraint system, and the head restraint can be removed, remove the head restraint. Otherwise, put the head restraint in the upper most position.

Not for Reproduction

Double-cab models: When securing some types of child restraint systems in rear seat, it may not be possible to properly use the seat belts in positions next to the child restraint without interfering with it or affecting seat belt effectiveness. Be sure your seat belt fits snugly across your shoulder and low on your hips. If it does not, or if it interferes with the child restraint, move to a different position. Failure to do so may result in death or serious injury.

◆ Installing child restraint system using a seat belt

Install the child restraint system in accordance to the operation manual enclosed with the child restraint system.

1

▶ Front seat

Adjust the seatback angle to the most upright position. Move the front seat fully rearward. (→P. 123)
If the head restraint interferes with your child restraint system, and the head restraint can be removed, remove the head restraint. Otherwise, put the head restraint in the upper most position. (→P. 128)

▶ Rear seat

If the head restraint interferes with your child restraint system, and the head restraint can be removed, remove the head restraint. Otherwise, put the head restraint in the upper most position. (→P. 128)

2 Run the seat belt through the child restraint system and insert the plate into the buckle. Make sure that the belt is not twisted. Securely fix the seat belt to the child restraint system in accordance to the directions enclosed with the child restraint system.

Not for Reproduction

3 If your child restraint system is not equipped with a lock-off (a seat belt locking feature), secure the child restraint system using a locking clip.

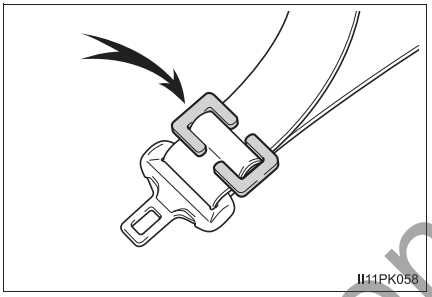

4 After installing the child restraint system, rock it back and forth to ensure that it is installed securely. (→P. 61)

◆ Removing a child restraint system installed with a seat belt

Press the buckle release button and fully retract the seat belt.

When releasing the buckle, the child restraint system may spring up due to the rebound of the seat cushion. Release the buckle while holding down the child restraint system.

Since the seat belt automatically reels itself, slowly return it to the stowing position.

■ When installing a child restraint system

You may need a locking clip to install the child restraint system. Follow the instructions provided by the manufacturer of the system. If your child restraint system does not provide a locking clip, you can purchase the following item from your Toyota dealer: Locking clip for child restraint system
(Part No. 73119-22010)

■ When removing the head restraint to install a child restraint system

After removing the child restraint system, make sure to reinstall the head restraint.

Not for Reproduction

WARNING

■ **When installing a child restraint system**

Observe the following precautions.
Failure to do so may result in death or serious injury.

- Do not allow children to play with the seat belt. If the seat belt becomes twisted around a child's neck, it may lead to choking or other serious injuries that could result in death. If this occurs and the buckle cannot be unfastened, scissors should be used to cut the belt.
- Ensure that the belt and plate are securely locked and the seat belt is not twisted.
- Shake the child restraint system left and right, and forward and backward to ensure that it has been securely installed.
- After securing a child restraint system, never adjust the seat.
- When a junior seat (booster seat) is installed, always ensure that the shoulder belt is positioned across the center of the child's shoulder. The belt should be kept away from the child's neck, but not so that it could fall off the child's shoulder.
- Follow all installation instructions provided by the child restraint system manufacturer.

Not for Reproduction

Child restraint system fixed with an ISOFIX rigid anchor

■ ISOFIX rigid anchors (ISOFIX child restraint system)

Lower anchors are provided for the outboard rear seats. (Tags displaying the location of the anchors are attached to the seats.)

■ Child restraint system suitability for various seating positions

The child restraint system suitability table (→P. 64), with symbols, displays the types of usable child restraint systems and possible seating position installation for the child restraint system owned by the customer. Confirm in accordance with the listed Size class, Anchor, as well as [Confirming the Mass group and Size class for ECE R44 ISOFIX corresponding child restraint systems].

Not for Reproduction

■ Confirming the Mass group and Size class for ECE R44 ISOFIX corresponding child restraint systems

1 Confirm the corresponding [Mass group] from the weight of the child (→P. 50)

(Ex. 1) When the weight is 12 kg, [Mass group 0+]

(Ex. 2) When the weight is 15 kg, [Mass group I]

2 Confirming Size class

Select the Size class corresponding to [Mass group] confirmed in step 1 from the [Child restraint systems fastened with ISOFIX (ECE R44) - Compatibility table] (→P. 64)*.

(Ex. 1) When [Mass group 0+], the corresponding size class is [C], [D], [E].

(Ex. 2) When [Mass group I], the corresponding size class is [A], [B], [B1], [C], [D].

*: However, listings that are marked with [X] can not be selected, despite having the corresponding size class in the suitability table of the [Seating position].

Not for Reproduction

■ Child restraint systems fastened with ISOFIX (ECE R44) - Compatibility table

ISOFIX child restraint systems are divided in different “size class”. According to this “size class”, you will be allowed to use it in the vehicle seating position mentioned in the table below. To know your child restraint system “size class” and “mass group”, please refer to the child restraint system manual.

If your child restraint system has no “size class” (or if you cannot find information in the table below), please refer to the child restraint system “vehicle list” for compatibility information or ask the retailer of your child seat.

Size class	Description
A	Full-height, forward-facing child restraint systems
B	Reduced-height forward-facing child restraint systems
B1	Reduced-height forward-facing child restraint systems
C	Full-size rearward-facing child restraint systems
D	Reduced-size rearward-facing child restraint systems
E	Rearward-facing infant seat
F	Left lateral-facing (carrycot) infant seat
G	Right lateral-facing (carrycot) infant seat

Not for Reproduction

▶ Double-cab models

Mass groups	Size class	Seating position		
		Front seat	Rear seat	
		Passenger seat	Outboard	Center
Carrycot	F	X	X	X
	G	X	X	X
0 Up to 10 kg (22 lb.)	E	X	IL	X
0+ Up to 13 kg (28 lb.)	E	X	IL	X
	D	X	IL	X
	C	X	IL	X
I 9 to 18 kg (20 to 39 lb.)	D	X	IL	X
	C	X	IL	X
	B	X	IUF*	X
	B1	X	IUF*	X
	A	X	IUF*	X

Key of letters inserted in the above table:

X: Not suitable seat position for ISOFIX child restraint systems in this mass group and/or size class.

IUF: Suitable for ISOFIX forward-facing child restraint systems of “universal” category approved for use in this mass group.

IL: Suitable for ISOFIX child restraint systems of the categories for “specific vehicles”, “restricted”, or “semi-universal” approved for use in this mass group.

*: If the head restraint interferes with your child restraint system, and the head restraint can be removed, remove the head restraint. Otherwise, put the head restraint in the upper most position.

Not for Reproduction

When securing some types of child restraint systems in rear seat, it may not be possible to properly use the seat belts in positions next to the child restraint without interfering with it or affecting seat belt effectiveness. Be sure your seat belt fits snugly across your shoulder and low on your hips. If it does not, or if it interferes with the child restraint, move to a different position. Failure to do so may result in death or serious injury.

■ **i-Size child restraint systems fastened with ISOFIX (ECE R129) - Compatibility table**

If your child restraint system is of “i-Size” category, you can install it on the positions mentioned by i-U in the table below.

Child restraint system category can be found in the child restraint system manual.

▶ Double-cab models

	Seating position		
	Front seat	Rear seat	
	Passenger seat	Outboard	Center
i-Size child restraint systems	X	i-U*	X

Key of letters inserted in the above table:

X: Not suitable for use with i-Size child restraint systems.

i-U: Suitable for i-Size “universal” child restraint systems forward and rearward facing.

*: If the head restraint interferes with your child restraint system, and the head restraint can be removed, remove the head restraint. Otherwise, put the head restraint in the upper most position.

Not for Reproduction

When securing some types of child restraint systems in rear seat, it may not be possible to properly use the seat belts in positions next to the child restraint without interfering with it or affecting seat belt effectiveness. Be sure your seat belt fits snugly across your shoulder and low on your hips. If it does not, or if it interferes with the child restraint, move to a different position. Failure to do so may result in death or serious injury.

- When installing a child restraint in the rear seats, adjust the front seat so that it does not interfere with the child or child restraint system.

■ Installation with ISOFIX rigid anchor (ISOFIX child restraint system)

Install the child restraint system in accordance to the operation manual enclosed with the child restraint system.

1. If the head restraint interferes with your child restraint system, and the head restraint can be removed, remove the head restraint. Otherwise, put the head restraint in the upper most position. (→P. 128)

2. Check the positions of the exclusive fixing bars, and install the child restraint system to the seat.

   The bars are installed in the clearance between the seat cushion and seatback.

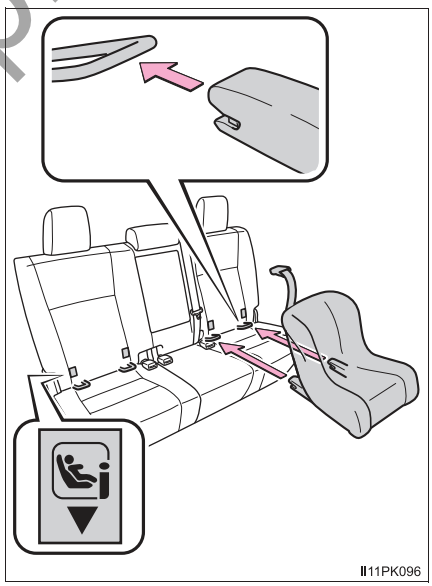

3. After installing the child restraint system, rock it back and forth to ensure that it is installed securely. (→P. 61)

Not for Reproduction

■ **When removing the head restraint to install a child restraint system**

After removing the child restraint system, make sure to reinstall the head restraint.

⚠ WARNING

■ **When installing a child restraint system**

Observe the following precautions.
Failure to do so may result in death or serious injury.

- After securing a child restraint system, never adjust the seat.
- When using the lower anchors, be sure that there are no foreign objects around the anchors and that the seat belt is not caught behind the child restraint system.
- Follow all installation instructions provided by the child restraint system manufacturer.

■ **Using child restraint anchorages**

WARNING: child restraint anchorages are designed to withstand only those loads imposed by correctly fitted child restraints. Under no circumstances are they to be used for adult seatbelts, harnesses, or for attaching other items or equipment to the vehicle.

Using a child restraint anchor fitting

■ Child restraint anchor fitting

Anchor fitting are provided for the outboard rear seat.

Use anchor fitting when fixing the strap.

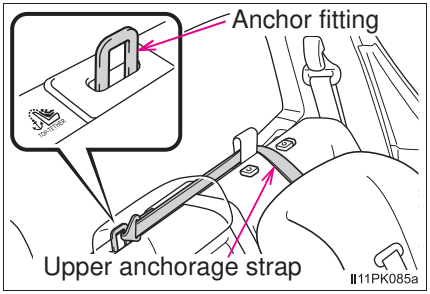

Not for Reproduction

■ Fixing the strap to the anchor fitting

Install the child restraint system in accordance to the operation manual enclosed with the child restraint system.

1 Remove the head restraint.

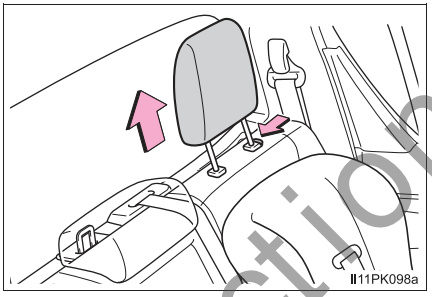

2 Pull up the anchor strap router.

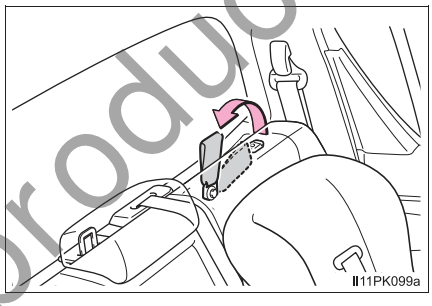

3 Route the upper anchorage strap through the anchor strap router as shown in the illustration.

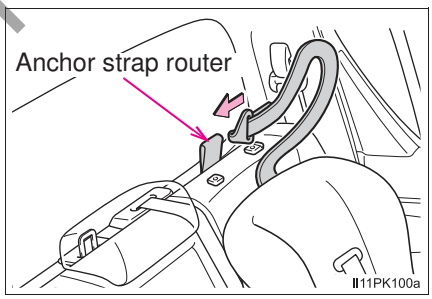

Not for Reproduction

4 Latch the attaching clip onto the anchor fitting and tighten the upper anchorage strap.

Make sure the upper anchorage strap is securely latched.
(→P. 61)

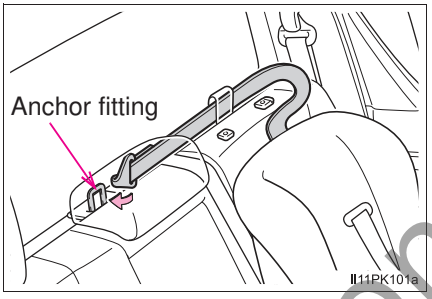

■ **When removing the head restraint to install a child restraint system**

After removing the child restraint system, make sure to reinstall the head restraint.

WARNING

■ **When installing a child restraint system**

Observe the following precautions.
Failure to do so may result in death or serious injury.

- Firmly attach the top strap.
- Do not attach the upper anchorage strap to anything other than the anchor fitting.
- After securing a child restraint system, never adjust the seat.
- Follow all installation instructions provided by the child restraint system manufacturer.
- When installing the child restraint system, do not install the head restraint.

■ **Using child restraint anchorages**

WARNING: child restraint anchorages are designed to withstand only those loads imposed by correctly fitted child restraints. Under no circumstances are they to be used for adult seatbelts, harnesses, or for attaching other items or equipment to the vehicle.

Not for Reproduction

Engine immobilizer system

The vehicle's keys have built-in transponder chips that prevent the engine from starting if a key has not been previously registered in the vehicle's on-board computer.

Never leave the keys inside the vehicle when you leave the vehicle.

This system is designed to help prevent vehicle theft but does not guarantee absolute security against all vehicle thefts.

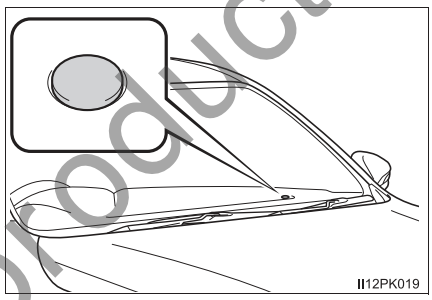

Vehicles without smart entry & start system:

The indicator light flashes after the key has been removed from the engine switch to indicate that the system is operating.

The indicator light stops flashing after the registered key has been inserted into the engine switch to indicate that the system has been canceled.

Vehicles with smart entry & start system:

The indicator light flashes after the engine switch has been turned off to indicate that the system is operating.
The indicator light stops flashing after the engine switch has been turned to ACCESSORY or IGNITION ON mode to indicate that the system has been canceled.

Not for Reproduction

System maintenance

The vehicle has a maintenance-free type engine immobilizer system.

Conditions that may cause the system to malfunction

- If the grip portion of the key is in contact with a metallic object
- If the key is in close proximity to or touching a key to the security system (key with a built-in transponder chip) of another vehicle

NOTICE

To ensure the system operates correctly

Do not modify or remove the system. If modified or removed, the proper operation of the system cannot be guaranteed.

Not for Reproduction

Alarm*

The alarm

The alarm uses light and sound to give an alert when an intrusion is detected.
The alarm is triggered in the following situations when the alarm is set:

- A locked door is opened in any way other than using the entry function, wireless remote control or mechanical key.
- The hood is opened.

Setting the alarm system

Close the doors and hood, and lock all the doors. The system will be set automatically after 30 seconds.

The indicator light changes from being on to flashing when the system is set.

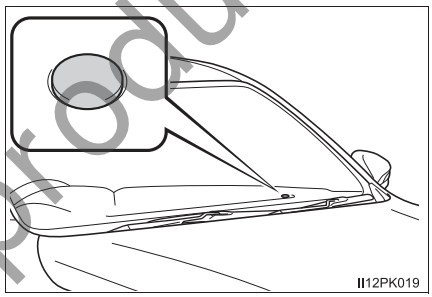

Not for Reproduction

*: If equipped

Deactivating or stopping the alarm

Do one of the following to deactivate or stop the alarms:

- Unlock the doors.
- Start the engine. (The alarm will be deactivated or stopped after a few seconds.)

System maintenance

The vehicle has a maintenance-free type alarm system.

Items to check before locking the vehicle

To prevent unexpected triggering of the alarm and vehicle theft, make sure of the following:

- Nobody is in the vehicle.
- The windows are closed before the alarm is set.
- No valuables or other personal items are left in the vehicle.

Triggering of the alarm

The alarm may be triggered in the following situation:
(Stopping the alarm deactivates the alarm system.)

A person inside the vehicle opens a door or hood.

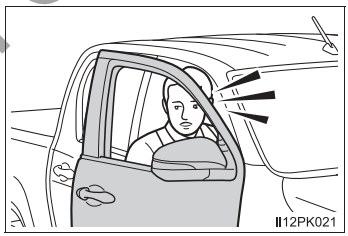

NOTICE

To ensure the system operates correctly

Do not modify or remove the system. If modified or removed, the proper operation of the system cannot be guaranteed.

Not for Reproduction

2. Instrument cluster

Warning lights and indicators 76
Gauges and meters 82
Multi-information display (Type A) 87
Multi-information display (Type B) 91
Fuel consumption information 99

Not for Reproduction

Warning lights and indicators

The warning lights and indicators on the instrument cluster and center panel inform the driver of the status of the vehicle's various systems.

For the purpose of explanation, the following illustrations display all warning lights and indicators illuminated.

▶ Vehicles without multi-information display

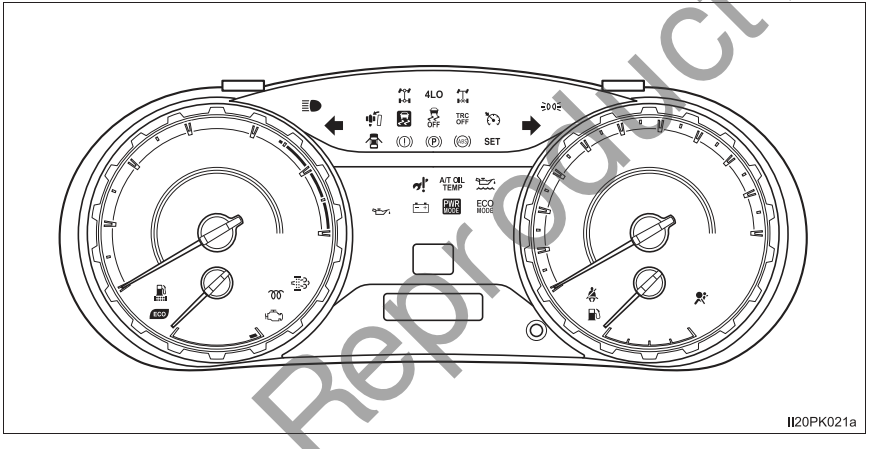

▶ Vehicles with multi-information display type A

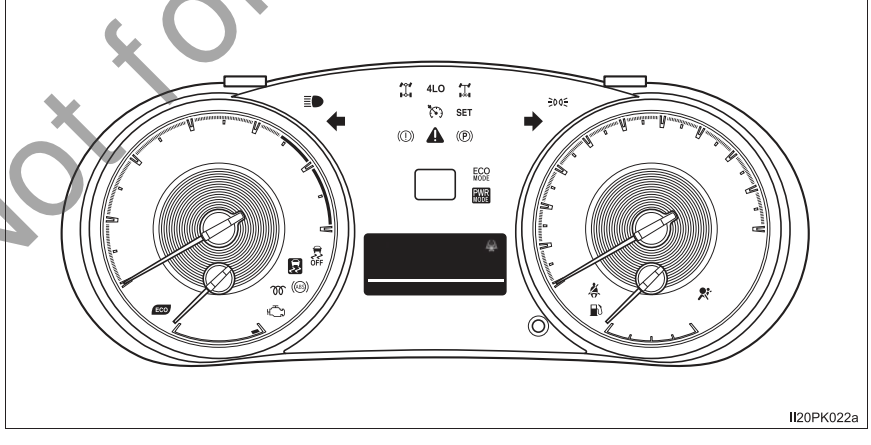

Not for Reproduction

▶ Vehicles with multi-information display type B

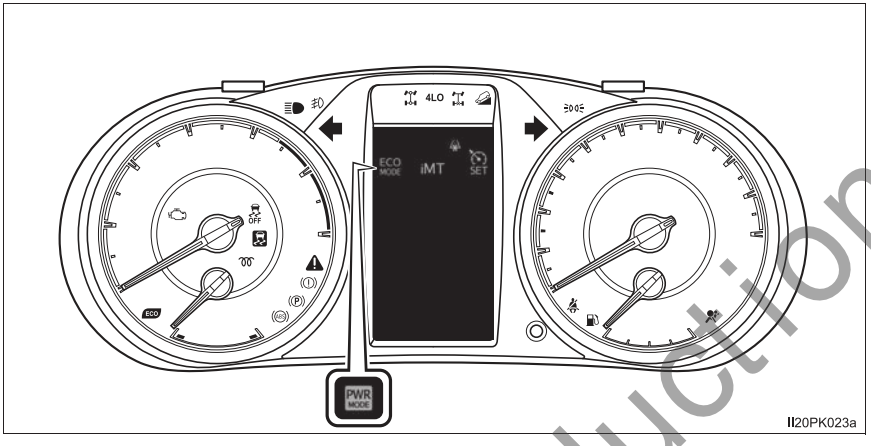

Warning lights

Warning lights inform the driver of malfunctions in the indicated vehicle's systems.

*1 Brake system warning light (→P. 461)	*1 ABS warning light (→P. 462)
*1 Charging system warning light (→P. 461) (if equipped)	*1 Slip indicator (→P. 462)
*1 Low engine oil pressure warning light (→P. 461) (if equipped)	*3 Four-wheel drive indicator light (→P. 463) (if equipped)
*1, 2 Malfunction indicator lamp (→P. 462)	*3 Low speed four-wheel drive indicator light (→P. 463) (if equipped)
*1 SRS warning light (→P. 462)	*3 Rear differential lock indicator light (→P. 463) (if equipped)

Not for Reproduction

*1, 4 A/T OIL TEMP (if equipped) — Automatic transmission fluid temperature warning light (→P. 463)

*1 (if equipped) — Fuel system warning light (→P. 463)

*1 (if equipped) — DPF system warning light (→P. 464)

*1, 4 (if equipped) — Brake Override System warning light (→P. 464)

*5 (if equipped) — Cruise control indicator light (→P. 464)

(if equipped) — Open door warning light (→P. 464)

Driver's and front passenger's seat belt reminder light (→P. 464)

*6 (If equipped) — Rear passengers' seat belt reminder lights (→P. 464)

Low fuel level warning light (→P. 464)

*1 (if equipped) — Low engine oil level warning light (→P. 465)

*1 (if equipped) — Master warning light (→P. 465)

(If equipped) — Go to service warning light (→P. 466)

Parking brake indicator light (→P. 465)

*1: These lights turn on when the engine switch is turned to the "ON" position (vehicles without smart entry & start system) or IGNITION ON mode (vehicles with smart entry & start system) to indicate that a system check is being performed. They will turn off after the engine is started, or after a few seconds. There may be a malfunction in a system if a light does not come on, or if the lights do not turn off. Have the vehicle inspected by your Toyota dealer.

*2: The light turns on or flashes to indicate a malfunction.

*3: The light flashes rapidly to indicate a malfunction.

*4: The light flashes to indicate a malfunction.

*5: The light turns to yellow to indicate a malfunction.

*6: The lights illuminate on the center panel.

Not For Reproduction

Indicators

The indicators inform the driver of the operating state of the vehicle's various systems.

Turn signal indicator (→P. 192)

Headlight high beam indicator (→P. 195)

Tail light indicator (→P. 194)

Fog light indicator (→P. 198)
(if equipped)

*1
Eco Driving Indicator Light (→P. 80)

Engine preheating indicator (→P. 167, 170)
(diesel engine)

*2
Cruise control indicator (→P. 206)
(if equipped)

"SET" indicator (→P. 206)
(if equipped)

*1
Downhill assist control system indicator (→P. 241)
(if equipped)

*1, 3
Slip indicator (→P. 235)

*1
VSC OFF indicator (→P. 235)

*1
"TRC OFF" indicator (→P. 235)
(if equipped)

Four-wheel drive indicator light (→P. 220)
(4WD models)

Low speed four-wheel drive indicator light (→P. 220)
(4WD models)

Rear differential lock indicator light (→P. 230)
(if equipped)

"ECO MODE" indicator (→P. 180, 187)
(if equipped)

"PWR MODE" indicator (→P. 180, 187)
(if equipped)

"iMT" indicator (→P. 188)
(if equipped)

Low outside temperature indicator (→P. 83)
(if equipped)

Parking brake indicator light (→P. 193)

Not for Reproduction

*1: These lights turn on when the engine switch is turned to the “ON” position (vehicles without smart entry & start system) or IGNITION ON mode (vehicles with smart entry & start system) to indicate that a system check is being performed. They will turn off after the engine is started, or after a few seconds. There may be a malfunction in a system if a light does not come on, or if the lights do not turn off. Have the vehicle inspected by your Toyota dealer.

*2: The light turns to green.

*3: The light flashes to indicate that the system is operating.

■ Eco Driving Indicator

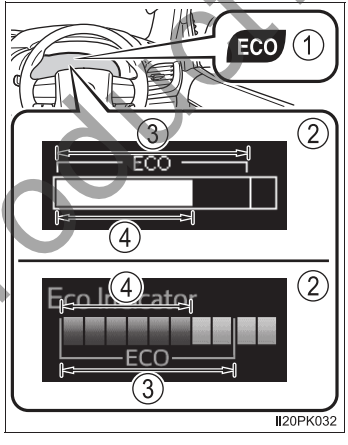

① Eco Driving Indicator Light
Vehicles with automatic transmission: During Eco-friendly acceleration (Eco driving), Eco Driving Indicator Light will turn on. When the accelerator pedal is depressed excessively, or when the vehicle is stopped, the light turns off.
Vehicles with manual transmission: During Eco-friendly acceleration or in Eco-friendly shift position (Eco driving), Eco Driving Indicator Light will turn on. When the accelerator pedal is depressed excessively, or when the vehicle is stopped, the light turns off.

② Eco Driving Indicator Zone Display (if equipped)
Suggests Zone of Eco driving with current Eco driving ratio based on acceleration.

③ Zone of Eco driving

④ Eco driving ratio based on acceleration

If the vehicle exceeds Zone of Eco driving, the right side of Eco Driving Indicator Zone Display will blink (vehicles with multi-information display type A) or illuminate (vehicles with multi-information display type B).

Not for Reproduction

Eco Driving Indicator Light and Eco Driving Indicator Zone Display will not operate in the following conditions:

- The shift lever is in anything other than D. (vehicles with automatic transmission)
- The shift lever is in R. (vehicles with manual transmission)
- The vehicle is in the power mode. (if equipped) (→P. 180, 187)
- Downhill assist control system is operating. (if equipped) (→P. 241)
- Front-wheel drive control switch is in L4. (if equipped) (→P. 220)
- The vehicle speed is approximately 130 km/h (81 mph) or higher.

Eco Driving Indicator Light can be activated or deactivated.

Vehicles without multi-information display:

While the odometer is being displayed, press and hold the odometer/trip meter display change button to display the Eco Driving Indicator Light customization screen.
Press the odometer/trip meter display change button to set Eco Driving Indicator Light to on or off.
Press and hold the odometer/trip meter display change button for more than 2 seconds to complete the setting.

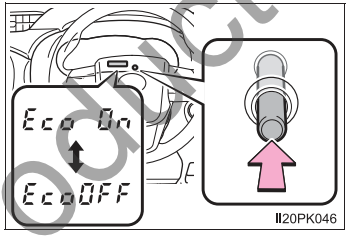

Vehicles with multi-information display:

→P. 530

WARNING

■ If a safety system warning light does not come on

Should a safety system light such as ABS and the SRS warning light not come on when you start the engine, this could mean that these systems are not available to help protect you in an accident, which could result in death or serious injury. Have the vehicle inspected by your Toyota dealer immediately if this occurs.

Not for Reproduction

Gauges and meters

▶ Vehicles without multi-information display

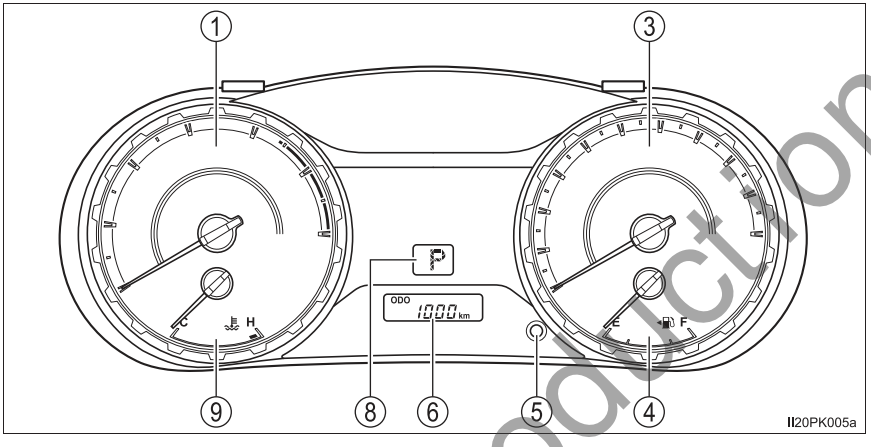

▶ Vehicles with multi-information display type A

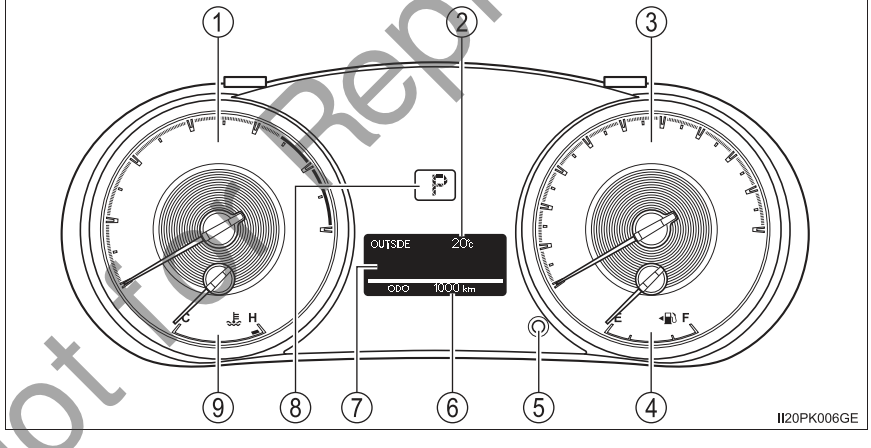

Not For Reproduction

▶ Vehicles with multi-information display type B

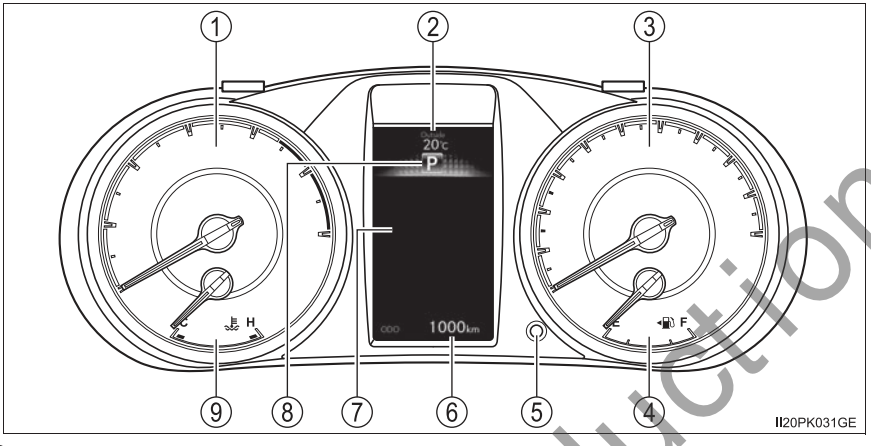

① Tachometer

Displays the engine speed in revolutions per minute.

② Outside temperature

Displays the outside temperature. The temperature range that can be displayed is from -40°C (-40°F) to 50°C (122°F). The low outside temperature indicator comes on when the ambient temperature is approximately 3°C (37°F) or lower, and goes off when approximately 5°C (41°F) or higher. (→P. 79)

③ Speedometer

Displays the vehicle speed.

④ Fuel gauge

Displays the quantity of fuel remaining in the tank.

⑤ Odometer/trip meter display change button

→P. 84

⑥ Odometer and trip meter

Odometer:
Displays the total distance the vehicle has been driven.

Trip meter:
Displays the distance the vehicle has been driven since the meter was last reset. Trip meters A and B can be used to record and display different distances independently.

⑦ Multi-information display

Presents the driver with a variety of driving-related data. (→P. 87, 91)

⑧ Shift position and shift range (automatic transmission)

Displays the selected shift position or selected shift range. (→P. 178)

Not for Reproduction

⑨ Engine coolant temperature gauge

Displays the engine coolant temperature.

Changing the display

▶ Vehicles without multi-information display

Pressing this button switches between odometer and trip meter displays.

① Odometer

② Trip meter A*

③ Trip meter B*

*: Pressing and holding the button will reset the trip meter.

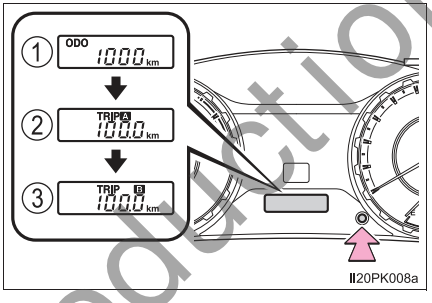

▶ Vehicles with multi-information display

Pressing this button switches among odometer, trip meter and instrument panel light control displays.

① Odometer

② Trip meter A*1

③ Trip meter B*1

④ Instrument panel light control display*2

*1: Pressing and holding the button will reset the trip meter.

*2: Pressing and holding the button will adjust brightness of the instrument panel lights.

For vehicles with multi-information display type A: Only the meter panel brightness can be adjusted.

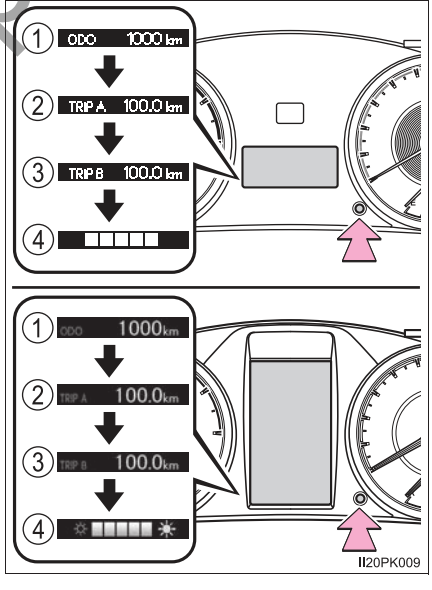

Not for Reproduction

■ **The meters illuminate when**

The engine switch is in the “ON” position (vehicles without smart entry & start system) or IGNITION ON mode (vehicles with smart entry & start system).

■ **The brightness of the instrument panel lights (vehicles with multi-information display)**

The instrument panel brightness levels when the tail lights are on and off can be adjusted individually. (on vehicles with multi-information display type A, only the meter panel brightness can be adjusted)

When the headlight switch is turned to on, the brightness will be reduced slightly unless the instrument panel brightness level is set to the brightest setting.

■ **When disconnecting and reconnecting battery terminals**

The trip meter data will be reset.

■ **Outside temperature display**

In the following situations, the correct outside temperature may not be displayed, or the display may take longer than normal to change:

- When the vehicle is stopped, or moving at low speeds (less than 20 km/h [12 mph])
- When the outside temperature has changed suddenly (at the entrance/exit of a garage, tunnel, etc.)

■ **When “--” is displayed**

The system may be malfunctioning. Take your vehicle to your Toyota dealer.

⚠ WARNING

■ **The information display at low temperatures (vehicles with multi-information display type B)**

Allow the interior of the vehicle to warm up before using the liquid crystal information display. At extremely low temperatures, the display monitor may respond slowly, and display changes may be delayed.

For vehicles with automatic transmission: For example, there is a lag between the driver’s shifting and the new gear number appearing on the display. This lag could cause the driver to downshift again, causing rapid and excessive engine braking and possibly an accident resulting in death or injury.

Not for Reproduction

NOTICE

■ **To prevent damage to the engine and its components**

- Do not let the indicator needle of the tachometer enter the red zone, which indicates the maximum engine speed.
- The engine may be overheating if the engine coolant temperature gauge is in the red zone (H). In this case, immediately stop the vehicle in a safe place, and check the engine after it has cooled completely. (→P. 499)

■ **The information display at low temperatures (vehicles with multi-information display type A)**

Allow the interior of the vehicle to warm up before using the liquid crystal information display. At extremely low temperatures, the display monitor may respond slowly, and display changes may be delayed.

Not for Reproduction

Multi-information display (Type A)*

Display contents

The multi-information display presents the driver with a variety of driving-related data.

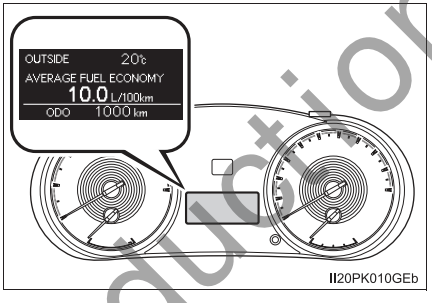

- Trip information (→P. 88)

  Displays driving range, fuel consumption and other cruising-related information.
- Setting (→P. 530)

  The settings of the following items can be changed.
  - Units
    Select to change the units for measure of the fuel consumption.
  - Eco Driving Indicator Light
    Select to activate/deactivate the Eco Driving Indicator Light.
- Warning messages (→P. 469)

  Displays warning messages and measures to be taken if a malfunction is detected.

Not for Reproduction

*: If equipped

Switching the display

“DISP” button

Items displayed can be switched by pressing the “DISP” button.

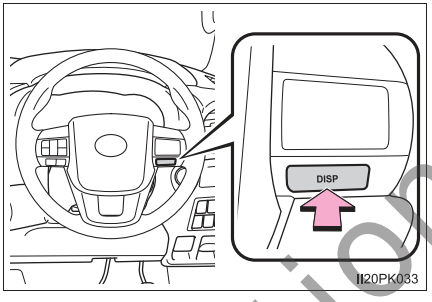

Trip information

■ Current fuel consumption

Displays the current rate of fuel consumption.

■ Average fuel consumption

Displays the average fuel consumption since the engine switch is turned to the “ON” position (vehicles without smart entry & start system) or IGNITION ON mode (vehicles with smart entry & start system).

- The function can be reset by pressing the “DISP” button for longer than 1 second when the average fuel consumption is displayed.
- Use the displayed average fuel consumption as a reference.

■ Driving range

Displays the estimated maximum distance that can be driven with the quantity of fuel remaining.

- This distance is computed based on your average fuel consumption. As a result, the actual distance that can be driven may differ from that displayed.
- When only a small amount of fuel is added to the tank, the display may not be updated.
  When refueling, turn the engine switch to the “LOCK” position (vehicles without smart entry & start system) or off (vehicles with smart entry & start system). If the vehicle is refueled without turn the engine switch to the “LOCK” position or off, the display may not updated.

Not for Reproduction

■ **Average vehicle speed**

Displays the average vehicle speed since the engine switch is turned to the “ON” position (vehicles without smart entry & start system) or IGNITION ON mode (vehicles with smart entry & start system).

The function can be reset by pressing the “DISP” button for longer than 1 second when the average vehicle speed is displayed.

■ **Elapsed time**

Displays the elapsed time after the engine switch is turned to the “ON” position (vehicles without smart entry & start system) or IGNITION ON mode (vehicles with smart entry & start system).

- When the engine switch is turned on, time is counted from 00:00. When the time exceeds 99:59, the counter returns to 00:00.
- The function can be reset by pressing the “DISP” button for longer than 1 second when the elapsed time is displayed.

■ **Eco Driving Indicator Zone Display (if equipped)**

Displays Zone of Eco driving with current Eco driving ratio based on acceleration. (→P. 80)

■ **Display off**

A blank screen is displayed.

■ **Setting display automatic cancelation**

In the following situations, setting display in which the settings can be changed through the “DISP” button will automatically be turned off.

- If a warning message appears while the setting display is displayed
- When the vehicle begins to move while the setting display is displayed

■ **When disconnecting and reconnecting battery terminals**

The trip information data and settings will be reset.

■ **Liquid crystal display**

Small spots or light spots may appear on the display. This phenomenon is characteristic of liquid crystal displays, and there is no problem continuing to use the display.

■ **Customization**

Settings (e.g. on/off operation of the Eco Driving Indicator Light) can be changed.
(Customizable features: →P. 529)

Not for Reproduction

WARNING

■ **Caution for use while driving**

- When operating the multi-information display while driving, pay extra attention to the safety of the area around the vehicle.
- Do not look continuously at the multi-information display while driving as you may fail to see pedestrians, objects on the road, etc. ahead of the vehicle.

Not for Reproduction

Multi-information display (Type B)*

Display contents

The multi-information display presents the driver with a variety of vehicle data.

The following information will be displayed when a menu icon is selected. (→P. 92)
Some of the information may be displayed automatically depending on the situation.

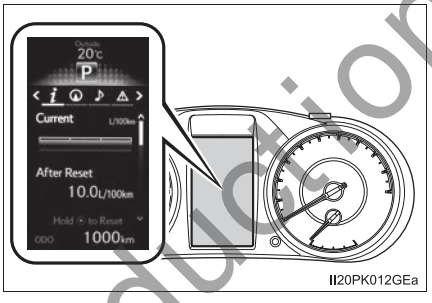

Drive information

Select to display various drive data. (→P. 93)

Navigation system-linked display (if equipped)

Select to display the following navigation system-linked information.
- Route guidance
- Compass display

Audio system-linked display

Select to enable selection of an audio source or track on the meter using the meter control switches.

*: If equipped

Not for Reproduction

Warning message display

Select to display warning messages and measures to be taken if a malfunction is detected. (→P. 469)

Settings display

Select to change the meter display settings. (→P. 530)

Operating the meter control switches

The multi-information display is operated using the meter control switches.

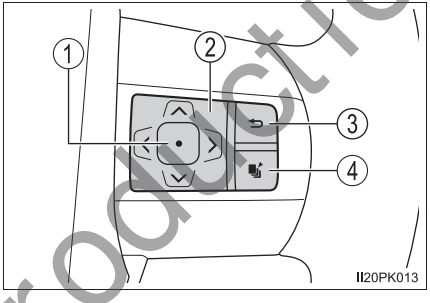

① Enter/Set

② Select an item/Change pages

③ Return to the previous screen

④ Press: Displays the screen registered as the top screen

When no screen has been registered, the drive information screen will be displayed.

Press and hold: Registers the currently displayed screen as the top screen

When the confirmation screen is displayed, select yes to register the screen. If the selected screen cannot be registered, a registration failure message will be shown.

Not for Reproduction

Drive information

Items displayed can be switched by pressing “<” or “>” of the meter control switches to select *i* and pressing “∧” or “∨”.

- Current fuel economy (bar type/value type)*1, 2

  Displays the current rate of fuel consumption.
- Average fuel economy (after reset*3/after start/after refuel)*1, 2

  Displays the average fuel consumption since the function was reset, the engine was started and the vehicle was refueled respectively.
- Average speed (after reset*3/after start)*1

  Displays the average vehicle speed since function was reset and the engine was started respectively.
- Elapsed time (after reset*3/after start)*1

  Displays the elapsed time since the function was reset and the engine was started respectively.
- Distance (range/after start)*1

  Displays the estimated maximum distance that can be driven with the quantity of fuel remaining.
  - This distance is computed based on your average fuel consumption. As a result, the actual distance that can be driven may differ from that displayed.
  - When only a small amount of fuel is added to the tank, the display may not be updated.
    When refueling, turn the engine switch off. If the vehicle is refueled without turning the engine switch off, the display may not be updated.

Not for Reproduction

- Eco Driving Indicator Zone Display (if equipped)

  Displays Zone of Eco driving with current Eco driving ratio based on acceleration. (→P. 80)
- Eco Score (if equipped)

  Displays the eco-driving total count to help improve the customer's eco driving techniques. (→P. 96)
- Eco Saving (if equipped)

  Displays the fuel consumption comparison, the average fuel consumption after reset, and the cost of the consumed fuel. (→P. 97)
- Display off

  A blank screen is displayed.

*1: Can be registered to drive information 1 and 2. (→P. 95)

*2: Use the displayed fuel consumption as a reference.

*3: Resetting procedures:

- Select a function to be reset using the meter control switches and then press and hold ⊙ to reset.
- If there is more than one function that can be reset, check boxes will be displayed next to those functions.

Not for Reproduction

Settings display

The settings of the following items can be changed, refer to P. 529

- Units

  Select to change the unit for measure of the fuel consumption.

- Eco Driving Indicator Light (if equipped)

  Select to activate/deactivate the Eco Driving Indicator Light. (→P. 80)

- switch settings

  You can register 1 screen as the top screen. To register, press and hold while the desired screen is displayed.

- Drive information 1 and 2

  Select to select up to 2 items that will be displayed on a drive information screen, up to 2 drive information screens can be set.

- Pop-up display

  Select to set the following pop-up displays, which may appear in some situations, on/off.
  - Route guidance display of the navigation system-linked system (if equipped)
  - Incoming call display of the hands-free phone system (if equipped)

- Accent color

  Select to change the accent colors on the screen, such as the cursor color.

- Eco Saving (if equipped)

  Select to set or change the fuel consumption comparison and fuel price. (→P. 97)

- Initialization

  Registered or changed meter settings will be deleted or returned to their default setting.

Not for Reproduction

■ Pop-up display

In some situations, such as when a switch operation is performed, a pop-up display will be temporarily displayed on the multi-information display.
The pop-up display function can be set on/off. (→P. 530)

■ Eco Score (if equipped)

Driving conditions are displayed in 5 stages and divided into 3 categories: start, cruise and stop. Every time the vehicle is stopped, the score is displayed. (Every time the vehicle is accelerated the score that was last displayed is reset. Accumulative scores are not calculated.)

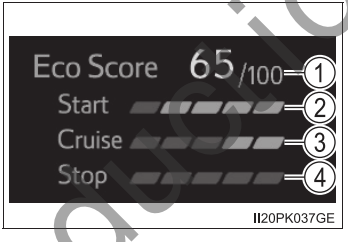

① Eco Score

Totals the counts of the eco start, eco cruise and eco stop, and displays the result.

② Eco start

Displays the eco level calculated from degree of acceleration when starting the vehicle

③ Eco cruise

Displays the eco level calculated from acceleration operation amount when driving the vehicle

④ Eco stop

Displays the eco level calculated from time between releasing the accelerator pedal and vehicle stop

If the accelerator pedal is not depressed, such as when the vehicle is driven using cruise control (if equipped), the driven distance is not included in the Eco Score.
The Eco Score evaluation differs depending on the driving conditions and environmental factors. The Eco Score may not be linked to fuel consumption.
The Eco Score will not operate in the following conditions:

- The vehicle speed is approximately 130 km/h (80 mph) or higher.
- The shift lever is in a position other than D. (vehicles with automatic transmission)
- Front-wheel drive control switch is in L4. (if equipped)
- Downhill assist control system is operating. (if equipped)
- The vehicle is in the power mode. (if equipped)

Not for Reproduction

■ **Eco Saving (if equipped)**

Displays the fuel consumption comparison, the average fuel consumption after reset, and the cost of the consumed fuel.

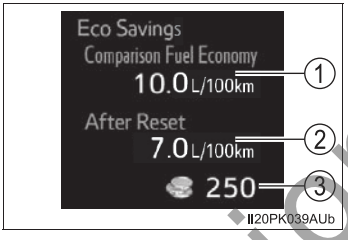

① Fuel consumption comparison

Displays the set fuel consumption that is compared with the actual fuel consumption.

② Average fuel consumption after reset

Displays the average fuel consumption since the function was reset.

- The function can be reset by pressing ⊙ more than 1 second when the average fuel consumption after reset is displayed
- Use the average fuel consumption as a reference

③ Savings/fuel cost

Displays the possible savings if the fuel consumption comparison is set, and displays the actual fuel cost if the fuel consumption comparison is not set.

Use the displayed fuel cost and savings as a reference. Depending on refueling methods, driving conditions and environmental factors, the displayed fuel cost may differ from the actual fuel cost, and in some cases, the fuel cost and savings may not be linked to the Eco Score evaluation.

■ **Eco Saving setting (if equipped)**

The fuel price and fuel consumption comparison settings can be set in the settings display. Use the meter control switches to select ⚙ while the vehicle is stopped and press ⊙, and select “Eco Saving” and press ⊙.

■ **Setting display automatic cancelation**

In the following situations, setting display in which the settings can be changed through the meter control switches will automatically be turned off.

- If a warning message appears while the setting display is displayed
- When the vehicle begins to move while the setting display is displayed

■ **When disconnecting and reconnecting battery terminals**

The drive information data and settings will be reset.

■ **Liquid crystal display**

Small spots or light spots may appear on the display. This phenomenon is characteristic of liquid crystal displays, and there is no problem continuing to use the display.

Not for Reproduction

WARNING

■ **Caution for use while driving**

- When operating the multi-information display while driving, pay extra attention to the safety of the area around the vehicle.
- Do not look continuously at the multi-information display while driving as you may fail to see pedestrians, objects on the road, etc. ahead of the vehicle.

■ **Eco Score**

Use the Eco Score as a reference. Always drive safely in accordance with road and traffic conditions.

Not for Reproduction

Fuel consumption information*

The fuel consumption information can be displayed on the navigation system or multimedia system screen.

Display the trip information or past record screen

▶ Audio system with “CAR” button

Press the “CAR” button.

▶ Audio system with “APPS” button

1 Press the “APPS” button.

2 Select “Eco”.

Fuel consumption

■ Trip information

If the trip information screen does not appear, select “Trip information”.

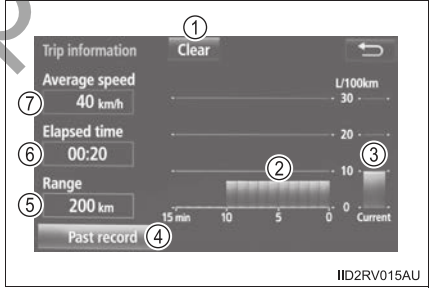

① Reset the trip information data

② Previous fuel consumption per minute

③ Current fuel consumption

④ “Past record” screen appears

⑤ Cruising range

⑥ Elapsed time

⑦ Average vehicle speed

Average fuel consumption for the past 15 minutes is divided by color into past averages and averages attained since the engine switch was last turned to the “ON” position (vehicles without smart entry & start system) or IGNITION ON mode (vehicles with smart entry & start system). Use the displayed average fuel consumption as a reference.

These images are examples only, and may vary slightly from actual conditions.

*: If equipped

Not for Reproduction

■ Past record

If the past record screen does not appear, select “Past record”.

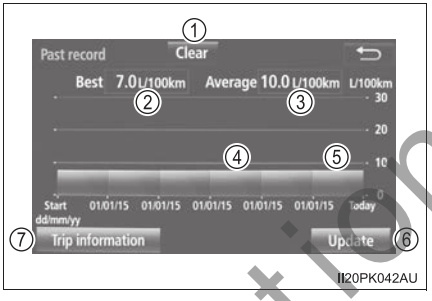

① Reset the past record data

② Best recorded fuel consumption

③ Average fuel consumption (if equipped)

④ Previous fuel consumption record

⑤ Current fuel consumption

⑥ Update the past record data

⑦ “Trip information” screen appears

The average fuel consumption history is divided by color into past averages and the average fuel consumption since the last updated. Use the displayed average fuel consumption as a reference.

These images are examples only, and may vary slightly from actual conditions.

■ Resetting the data

Selecting “Clear” on the “Trip information” screen will reset the trip information data.

Selecting “Clear” on the “Past record” screen will reset the past record data.

■ Updating the past record data

Selecting “Update” on the “Past record” screen will update the past record data.
Also, the average fuel consumption displayed in the multi-information display will be reset at the same time.

■ Cruising range

Displays the estimated maximum distance that can be driven with the quantity of fuel remaining.
This distance is computed based on your average fuel consumption. As a result, the actual distance that can be driven may differ from that displayed.

Not for Reproduction

Operation of each component

3

3-1. Key information
Keys.....102
3-2. Opening, closing and locking the doors
Side doors.....107
Access panels (smart-cab models only) 112
Tailgate.....113
Smart entry & start system.....116
3-3. Adjusting the seats
Front seats.....123
Rear seats 125
Head restraints 128
3-4. Adjusting the steering wheel and mirrors
Steering wheel.....131
Inside rear view mirror 133
Outside rear view mirrors 134
3-5. Opening and closing the windows
Power windows.....137
Quarter windows (smart-cab models).....141

Not for Reproduction

Keys

The keys

The following keys are provided with the vehicle.

▶ Vehicles without smart entry & start system

① Master keys

Operating the wireless remote control function (→P. 103)

② Valet key

③ Key number plate

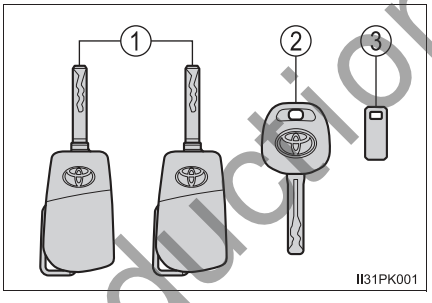

▶ Vehicles with smart entry & start system

① Electronic keys

- Operating the smart entry & start system (→P. 116)
- Operating the wireless remote control function (→P. 103)

② Mechanical keys

③ Key number plate

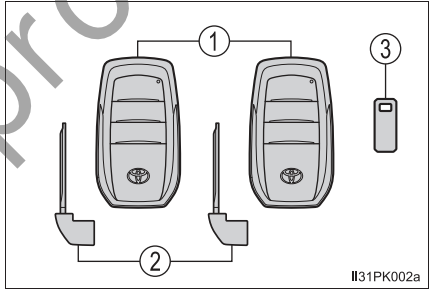

Not for Reproduction

Wireless remote control

▶ Vehicles without smart entry & start system

① Locks all the doors (→P. 107)

Check that the door is securely locked.

② Unlocks all the doors (→P. 107)

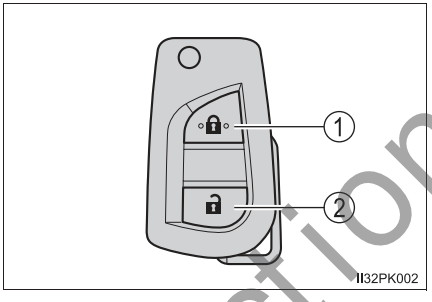

▶ Vehicles with smart entry & start system

① Locks all the doors (→P. 107)

Check that the door is securely locked.

② Unlocks all the doors (→P. 107)

③ Sounds the alarm (→P. 104)

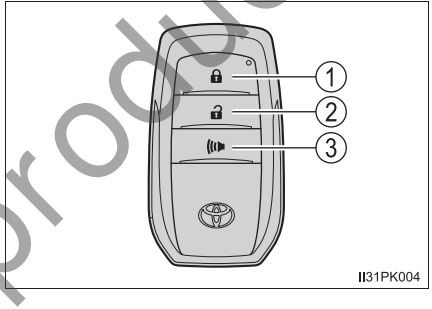

Not for Reproduction

Using the master key (vehicles without smart entry & start system)

① Releasing

To release the key, press the button.

② Folding

To stow the key back in its case, push the key back to the stowed position while pressing the button.

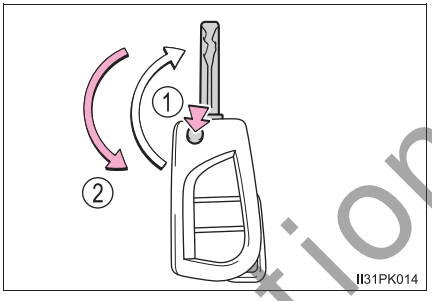

Using the mechanical key (vehicles with smart entry & start system)

To take out the mechanical key, slide the release lever and take the key out.

The mechanical key can only be inserted in one direction, as the key only has grooves on one side. If the key cannot be inserted in a lock cylinder, turn it over and re-attempt to insert it.

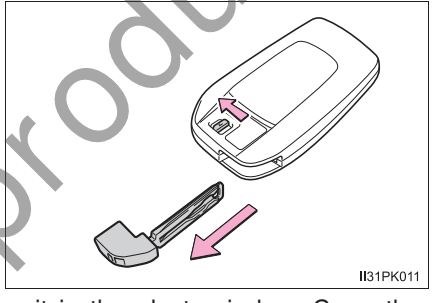

After using the mechanical key, store it in the electronic key. Carry the mechanical key together with the electronic key. If the electronic key battery is depleted or the entry function does not operate properly, you will need the mechanical key. (→P. 490)

■ Panic mode (vehicles with smart entry & start system)

When is pressed for longer than about one second, an alarm will sound intermittently and the vehicle lights will flash to deter any person from trying to break into or damage your vehicle.

To stop the alarm, press any button on the electronic key.

Not for Reproduction

■ **When required to leave the vehicle's key with a parking attendant**

Lock the glove box as circumstances demand. (→P. 377)

▶ Vehicles without smart entry & start system

Carry the master key for your own use and provide the attendant with the valet key.

▶ Vehicles with smart entry & start system

Remove the mechanical key for your own use and provide the attendant with the electronic key only.

■ **If you lose your keys**

New genuine keys can be made by your Toyota dealer using a master key (vehicles without smart entry & start system) or the other key (vehicles with smart entry & start system) and the key number stamped on your key number plate. Keep the plate in a safe place such as your wallet, not in the vehicle.

■ **When riding in an aircraft**

When bringing a key with wireless remote control function onto an aircraft, make sure you do not press any buttons on the key while inside the aircraft cabin. If you are carrying the key in your bag etc., ensure that the buttons are not likely to be pressed accidentally. Pressing a button may cause the key to emit radio waves that could interfere with the operation of the aircraft.

■ **Key battery depletion**

▶ Vehicles without smart entry & start system

If the wireless remote control function does not operate, the battery may be depleted. Replace the battery when necessary. (→P. 425)

▶ Vehicles with smart entry & start system

→P. 121

■ **If a message regarding the state of the electronic key or engine switch mode, etc. is shown**

To prevent trapping the electronic key inside the vehicle, leaving the vehicle without turning off the engine switch or other passengers from unintentionally taking the key out of the vehicle, etc., a message that prompts the user to confirm the state of the electronic key or engine switch mode may be shown on the multi-information display. In those cases, follow the instructions on the display immediately.

■ **If "KEY BATTERY LOW"/"Key battery low" is shown on the multi-information display (if equipped)**

The electronic key has a low battery. Replace the electronic key battery.

■ **Replacing the electronic key battery**

→P. 425

■ **Confirmation of the registered key number**

The number of keys already registered to the vehicle can be confirmed. Ask your Toyota dealer for details.

Not for Reproduction

NOTICE

■ **To prevent key damage**

- Do not drop the keys, subject them to strong shocks or bend them.
- Do not expose the keys to high temperatures for long periods of time.
- Do not get the keys wet or wash them in an ultrasonic washer etc.
- Do not attach metallic or magnetic materials to the keys or place the keys close to such materials.
- Do not disassemble the keys.
- Do not attach a sticker or anything else to the surface of the electronic key.
- Do not place the keys near objects that produce magnetic fields, such as TVs, audio systems and induction cookers, or medical electrical equipment, such as low-frequency therapy equipment.

■ **Carrying the electronic key on your person (vehicles with smart entry & start system)**

Carry the electronic key 10 cm (3.9 in.) or more away from electric appliances that are turned on. Radio waves emitted from electric appliances within 10 cm (3.9 in.) of the electronic key may interfere with the key, causing the key to not function properly.

■ **In case of a smart entry & start system malfunction or other key-related problems (vehicles with smart entry & start system)**

Take your vehicle with all the electronic keys provided with your vehicle to your Toyota dealer.

■ **When an electronic key is lost (vehicles with smart entry & start system)**

If the electronic key remains lost, the risk of vehicle theft increases significantly. Visit your Toyota dealer immediately with all remaining electronic keys that were provided with your vehicle.

Not for Reproduction

Side doors

The vehicle can be locked and unlocked using the entry function, wireless remote control, key or door lock switch.

Locking and unlocking the doors from outside

◆ Smart entry & start system (if equipped)

While carrying the electronic key, press the button to lock and unlock.

After locking, check that the door is securely locked.

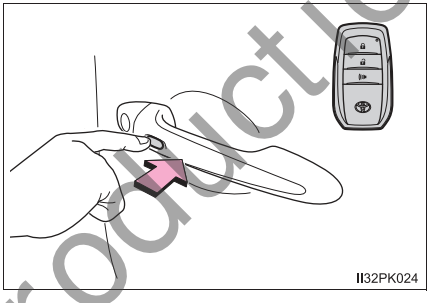

◆ Wireless remote control

▶ Vehicles without smart entry & start system

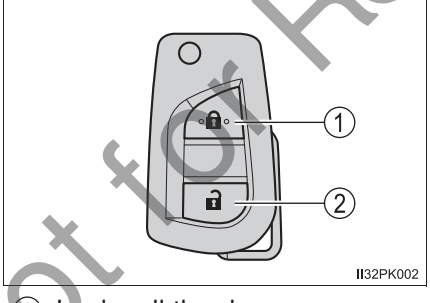

▶ Vehicles with smart entry & start system

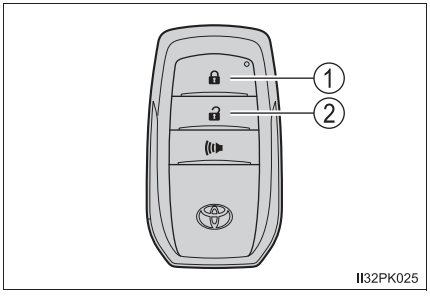

① Locks all the doors

Check that the door is securely locked.

② Unlocks all the doors

Not for Reproduction

◆ Key

▶ Vehicles without smart entry & start system

① Locks all the doors

② Unlocks all the doors

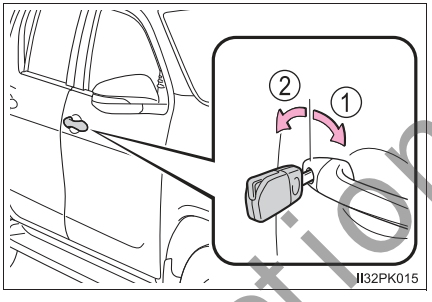

▶ Vehicles with smart entry & start system

The doors can also be locked and unlocked with the mechanical key. (→P. 490)

■ Operation signals

A buzzer* sounds and the emergency flashers flash to indicate that the doors have been locked/unlocked using the smart entry & start system or the wireless remote control. (Locked: once; Unlocked: twice)

*: Vehicles with smart entry & start system

■ Security feature

If a door is not opened within approximately 30 seconds after the vehicle is unlocked using the smart entry & start system or the wireless remote control, the security feature automatically locks the vehicle again.

■ Door lock buzzer

If an attempt to lock the doors is made when a door is not fully closed, a buzzer sounds continuously for 5 seconds. Fully close the door to stop the buzzer, and lock the vehicle once more.

■ If the entry function (vehicles with smart entry & start system) or the wireless remote control (if equipped) does not operate properly

- Vehicles without smart entry & start system: Use the key to lock and unlock the doors. (→P. 108)
- Vehicles with smart entry & start system: Use the mechanical key to lock and unlock the doors. (→P. 490)
- Replace the battery with a new one if it is depleted. (→P. 425)

Not for Reproduction

■ **Setting the alarm (if equipped)**

Locking the doors will set the alarm system. (→P. 73)

■ **If a symbol indicating one or more doors are open is shown on the multi-information display (if equipped)**

One or more of the doors is not fully closed. The system also indicates which doors are not fully closed. If the vehicle reaches a speed of 5 km/h (3 mph), master warning light flashes and a buzzer sounds to indicate that the door(s) are not yet fully closed.
Make sure that all the doors are closed.

Locking and unlocking the doors from inside

◆ Door lock switch

① Locks all the doors

② Unlocks all the doors

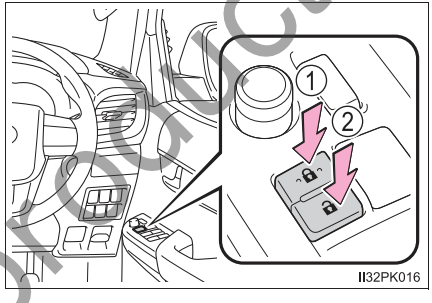

◆ Inside lock button

① Locks the door

② Unlocks the door

The driver's door can be opened by pulling the inside handle even if the lock button is in the lock position.

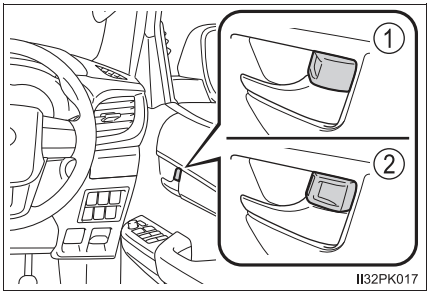

Not for Reproduction

Locking the front doors from the outside without a key

1 Move the inside lock button to the lock position.

2 Close the door while pulling the door handle.

Vehicles without smart entry & start system: The driver's door cannot be locked if either of the door is open and the key is in the engine switch.

Vehicles with smart entry & start system: The door cannot be locked if the engine switch is in ACCESSORY or IGNITION ON mode, or the electronic key is left inside the vehicle.
However, the key may not be detected correctly and the door may be locked.

Rear door child-protector lock (double-cab models only)

The door cannot be opened from inside the vehicle when the lock is set.

① Unlock

② Lock

These locks can be set to prevent children from opening the rear doors. Push down on each rear door switch to lock both rear doors.

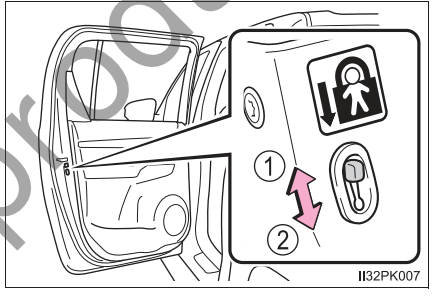

Not for Reproduction

Conditions affecting operation

▶ Vehicles without smart entry & start system

The wireless remote control function may not operate normally in the following situations:

- Near a TV tower, radio station, electric power plant, airport or other facility that generates strong radio waves
- When carrying a portable radio, cellular phone or other wireless communication device
- When multiple wireless keys are in the vicinity
- When the wireless key is in contact with, or is covered by a metallic object
- When a wireless key (that emits radio waves) is being used nearby
- When the wireless key has been left near an electrical appliance such as a personal computer

▶ Vehicles with smart entry & start system

→P. 119

WARNING

To prevent an accident

Observe the following precautions while driving the vehicle.
Failing to do so may result in a door opening and an occupant falling out, resulting in death or serious injury.

- Ensure that all doors are properly closed and locked.
- Do not pull the inside handle of the doors while driving.

  Be especially careful for the driver's door, as the door may be opened even if the inside lock button is in locked position.
- Set the rear door child-protector locks when children are seated in the rear seats.

Not for Reproduction

Access panels (smart-cab models only)

The access panels (rear door) can be opened using the inside handle.

1 Open the front door widely.

2 Pull (from the outside) or push (from the inside) the inside handle of the access panels.

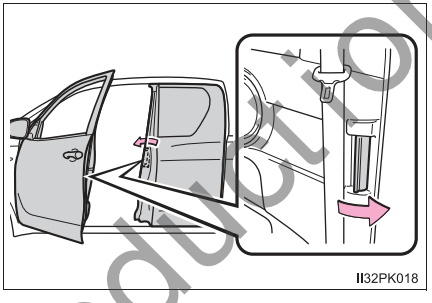

3 Open the access panels.

You can open and close the access panels only when the front door is widely opened.

NOTICE

■ **When opening or closing the front door and access panels**

The front door and access panels could be damaged if they hit each other when being opened or closed.

Not for Reproduction

Tailgate*

The tailgate can be locked/unlocked and opened by the following procedures.

Locking and unlocking the tailgate (vehicles with key hole)

① Lock with the master key or the mechanical key

② Unlock with the master key or the mechanical key

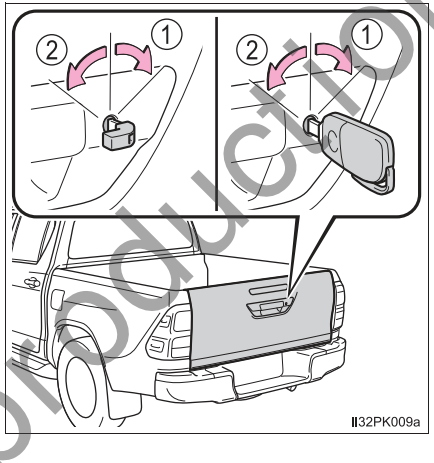

Not for Reproduction

*: If equipped

Opening the tailgate

▶ Type A

Unlock the latches and open the tailgate slowly.

The support stays will hold the tailgate horizontal.

After closing the tailgate, try pulling it toward you to make sure it is securely locked.

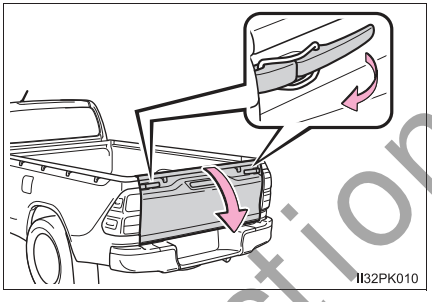

▶ Type B

Pull the handle and open the tailgate slowly.

The support stays will hold the tailgate horizontal.

After closing the tailgate, try pulling it toward you to make sure it is securely locked.

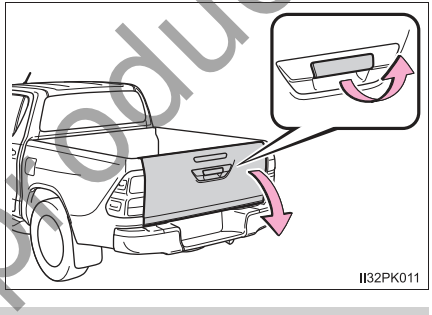

Lowering the tailgate

Release the brackets on the support stays from the lugs on both sides as shown in the illustration.

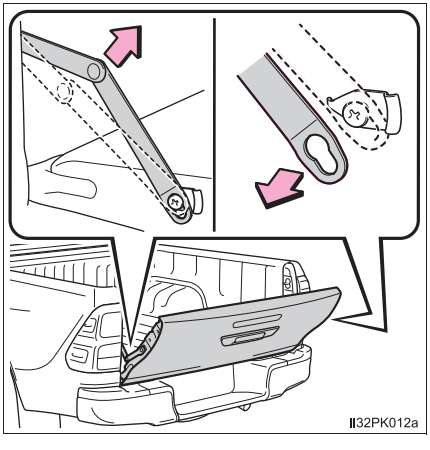

Not for Reproduction

Rear step bumper (if equipped)

The rear step bumper is for rear end protection and easier step-up loading.

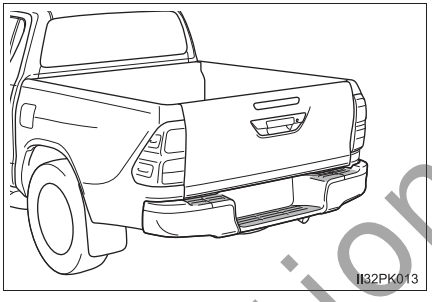

WARNING

Observe the following precautions.
Failure to do so may result in death or serious injury.

■ **Caution while driving**

- Do not drive with the tailgate open.
- Do not get on the rear step bumper.

■ **When opening or closing the tailgate**

- Check the safety of the surrounding area, and be careful not to catch fingers etc. in the tailgate.
- Do not allow a child to open or close the tailgate. Doing so may cause the child's hand, head, arm or neck to be caught in the tailgate, resulting in death or serious injury.
- On an incline, it may be more difficult to open or close the tailgate than on a level surface.
  Also, the tailgate may suddenly open or close. Be careful not to catch fingers etc. in the tailgate.
- When pulling the handle or releasing the support stays, hold and operate them properly. Failure to do so may cause the hands etc. to be caught, resulting in serious injury or an unexpected accident.
- Be careful when opening or closing the tailgate in windy weather, as it may forcefully move.
- After closing the tailgate, make sure it is securely locked.

NOTICE

■ **To prevent damage to the rear step bumper**

Do not allow more than one person to get on the rear step bumper at a time.

Not for Reproduction

Smart entry & start system*

The following operations can be performed simply by carrying the electronic key on your person, for example in your pocket. The driver should always carry the electronic key.

- Locks and unlocks the doors (→P. 107)
- Starts and stops the engine (→P. 170)

Antenna location

① Antennas outside the cabin

② Antennas inside the cabin

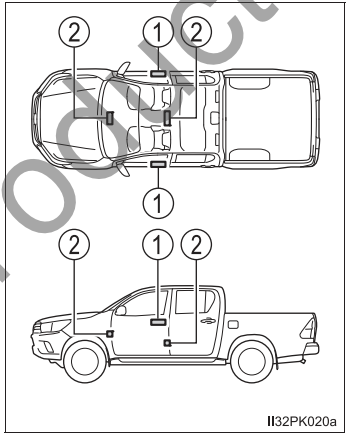

Not for Reproduction

*: If equipped

■ **Effective range (areas within which the electronic key is detected)**

- When locking or unlocking the doors

  The system can be operated when the electronic key is within about 0.7 m (2.3 ft.) of either of the lock/unlock button on the outside door handle. (Only the doors detecting the key can be operated.)

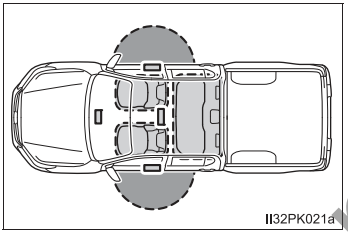

- When starting the engine or changing engine switch modes

  The system can be operated when the electronic key is inside the vehicle. (The electronic key is not detected when it is on the floor or on the instrument panel.)

■ **Battery-saving function**

The battery-saving function will be activated in order to prevent the electronic key battery and the battery from being discharged while the vehicle is not in operation for a long time.

■ **Electronic Key Battery-Saving Function**

When battery-saving mode is set, battery depletion is minimized by stopping the electronic key from receiving radio waves.

Press 🔓 twice while pressing and holding 🔒. Confirm that the electronic key indicator flashes 4 times.
While the battery-saving mode is set, the smart entry & start system cannot be used. To cancel the function, press any of the electronic key buttons.

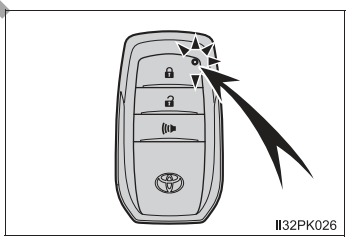

Not for Reproduction

Alarms and warning indicators

A combination of exterior and interior alarms as well as warning messages shown on the multi-information display are used to prevent theft of the vehicle and accidents resulting from erroneous operation. Take appropriate measures in response to any warning message on the multi-information display.

The following table describes circumstances and correction procedures when only alarms are sounded.

Alarm	Situation	Correction procedure
Exterior alarm sounds once for 5 seconds	An attempt was made to lock the vehicle while a door was open.	Close all of the doors and lock the doors again.
Interior alarm pings continuously	The engine switch was turned to ACCESSORY mode while the driver's door was open (or the driver's door was opened while the engine switch was in ACCESSORY mode).	Turn the engine switch off and close the driver's door.

Not for Reproduction

Conditions affecting operation

The smart entry & start system uses weak radio waves. In the following situations, the communication between the electronic key and the vehicle may be affected, preventing the smart entry & start system, wireless remote control and engine immobilizer system from operating properly.
(Ways of coping: →P. 490)

- When the electronic key battery is depleted
- Near a TV tower, electric power plant, gas station, radio station, large display, airport or other facility that generates strong radio waves or electrical noise
- When carrying a portable radio, cellular phone, cordless phone or other wireless communication device
- When the electronic key is in contact with, or is covered by the following metallic objects
  - Cards to which aluminum foil is attached
  - Cigarette boxes that have aluminum foil inside
  - Metallic wallets or bags
  - Coins
  - Hand warmers made of metal
  - Media such as CDs and DVDs
- When multiple electronic keys are in the vicinity
- When other wireless keys (that emit radio waves) are being used nearby
- When carrying the electronic key together with the following devices that emit radio waves
  - Another vehicle's electronic key or a wireless key that emits radio waves
  - Personal computers or personal digital assistants (PDAs)
  - Digital audio players
  - Portable game systems
- If window tint with a metallic content or metallic objects are attached to the rear window
- When the electronic key is placed near a battery charger or electronic devices

Not for Reproduction

■ **Note for the entry function**

- Even if the electronic key is within the effective range (detection areas) when locking or unlocking the doors, the system may not operate properly if the electronic key is too close to the window or outside door handle, near the ground, or in a high place.
- Do not leave the electronic key on top of the instrument panel or near the door pockets when exiting the vehicle. Depending on the radio wave reception conditions, it may be detected by the antenna outside the cabin and the doors will become lockable from the outside, possibly trapping the electronic key inside the vehicle.
- As long as the electronic key is within the effective range, the doors may be locked or unlocked by anyone. However, only the doors detecting the electronic key can be used to unlock the vehicle.
- Even if the electronic key is not inside the vehicle, it may be possible to start the engine if the electronic key is near the window.
- If the wireless remote control is used to lock the doors when the electronic key is near the vehicle, there is a possibility that the door may not be unlocked by the entry function. (Use the wireless remote control to unlock the doors.)
- Pulling the outside door handle while pressing the lock/unlock button on the outside door handle may prevent the doors from being unlocked. In this case, return the door handle to the original position, press the lock/unlock button again, and check that the doors unlock before pulling the door handle again.
- Unlocking the vehicle may take more time if another electronic key is within the effective range.

■ **When the vehicle is not driven for extended periods**

- To prevent theft of the vehicle, do not leave the electronic key within 2 m (6 ft.) of the vehicle.
- The smart entry & start system can be deactivated in advance. Ask your Toyota dealer for details.

■ **To operate the system properly**

Make sure to carry the electronic key when operating the system. Do not get the electronic key too close to the vehicle when operating the system from the outside of the vehicle.

Depending on the position and holding condition of the electronic key, the key may not be detected correctly and the system may not operate properly. (The alarm may go off accidentally, or the door lock prevention function may not operate.)

Not for Reproduction

■ **If the smart entry & start system does not operate properly**

- Locking and unlocking the doors: Use the mechanical key. (→P. 490)
- Starting the engine: →P. 491

■ **Electronic key battery depletion**

- The standard battery life is 1 to 2 years.
- If the battery becomes low, an alarm will sound in the cabin when the engine stops.
- As the electronic key always receives radio waves, the battery will become depleted even if the electronic key is not used. The following symptoms indicate that the electronic key battery may be depleted. Replace the battery when necessary. (→P. 425)
  - The smart entry & start system or the wireless remote control does not operate.
  - The detection area becomes smaller.
  - The LED indicator on the key surface does not turn on.
- To avoid serious deterioration, do not leave the electronic key within 1 m (3 ft.) of the following electrical appliances that produce a magnetic field:
  - TVs
  - Personal computers
  - Cellular phones, cordless phones and battery chargers
  - Recharging cellular phones or cordless phones
  - Table lamps
  - Induction cookers

■ **If "KEY LEFT INSIDE VEHICLE" "Key left inside vehicle" is shown on the multi-information display (if equipped)**

An attempt was made to lock the doors using the smart entry & start system while the electronic key was still inside the vehicle, or an attempt was made to lock either front door by opening a door and putting the inside lock button into the lock position, then closing the door by pulling on the outside door handle with the electronic key still inside the vehicle.
Retrieve the electronic key from the vehicle and lock the doors again.

■ **Customization that can be configured at your Toyota dealer**

Settings (e.g. smart entry & start system) can be changed.
(Customizable features: →P. 529)

■ **If the smart entry & start system has been deactivated in a customized setting**

- Locking and unlocking the doors:
  Use the wireless remote control or mechanical key. (→P. 107, 490)
- Starting the engine and changing engine switch modes: →P. 491
- Stopping the engine: →P. 172

Not for Reproduction

WARNING

■ **Caution regarding interference with electronic devices**

- People with implantable cardiac pacemakers, cardiac resynchronization therapy-pacemakers or implantable cardioverter defibrillators should maintain a reasonable distance between themselves and the smart entry & start system antennas. (→P. 116)
  The radio waves may affect the operation of such devices. If necessary, the entry function can be disabled. Ask your Toyota dealer for details, such as the frequency of radio waves and timing of the emitting radio waves. Then, consult your doctor to see if you should disable the entry function.
- Users of any electrical medical device other than implantable cardiac pacemakers, cardiac resynchronization therapy-pacemakers or implantable cardioverter defibrillators should consult the manufacturer of the device for information about its operation under the influence of radio waves.
  Radio waves could have unexpected effects on the operation of such medical devices.

Ask your Toyota dealer for details on disabling the entry function.

Not for Reproduction

Front seats

Adjustment procedure

▶ Manual seat

① Seat position adjustment lever

② Seatback angle adjustment lever

③ Vertical height adjustment lever (if equipped for driver's seat only)

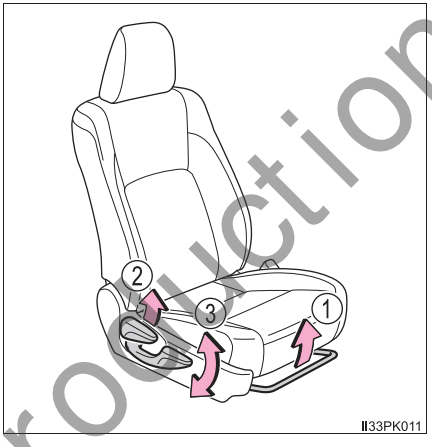

▶ Power seat (driver's seat only)

① Seat position adjustment switch

② Seatback angle adjustment switch

③ Seat cushion (front) angle adjustment switch

④ Vertical height adjustment switch

Not for Reproduction

WARNING

■ **When adjusting the seat position**

- Take care when adjusting the seat position to ensure that other passengers are not injured by the moving seat.
- Do not put your hands under the seat or near the moving parts to avoid injury.
  Fingers or hands may become jammed in the seat mechanism.

■ **Seat adjustment**

- To reduce the risk of sliding under the lap belt during a collision, do not recline the seat more than necessary.
  If the seat is too reclined, the lap belt may slide past the hips and apply restraint forces directly to the abdomen, or your neck may contact the shoulder belt, increasing the risk of death or serious injury in the event of an accident.
  Adjustments should not be made while driving as the seat may unexpectedly move and cause the driver to lose control of the vehicle.
- Manual seat: After adjusting the seat, make sure that the seat is locked in position.

Not for Reproduction

Rear seats*

Removing the rear seat cushions (smart-cab models)

① Unhook the lock release lever.

② Pull the seat cushions up and then pull toward the front of vehicle.

The seat cushions can be removed separately.

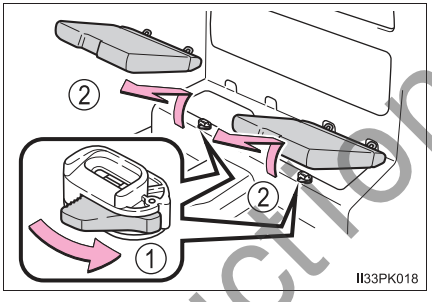

Raising the bottom cushion (double-cab models)

▶ Type A

1 Pull the head restraint up.

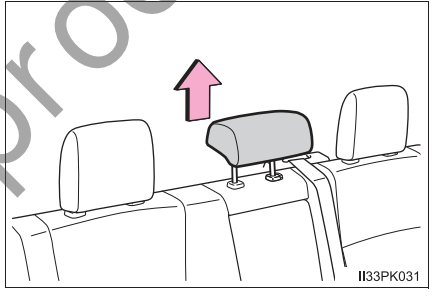

2 Pull the strap and raise the bottom cushion.

The latch under the bottom cushion will release allowing the bottom cushion to be raised.

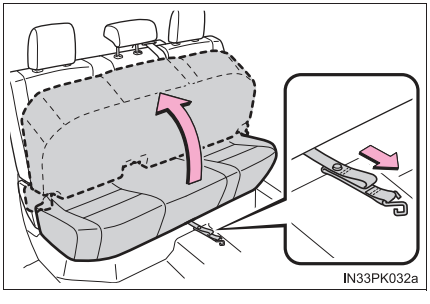

*: If equipped

Not for Reproduction

3 Anchor the strap to the head restraint.

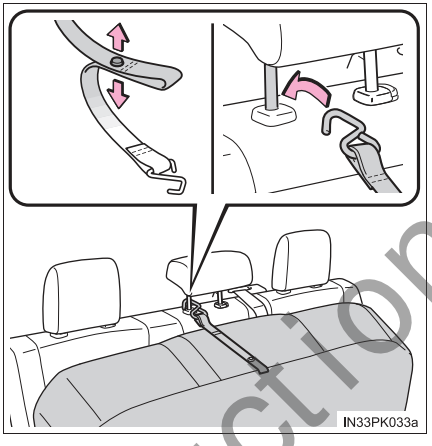

▶ Type B

1 Pull the head restraints up.

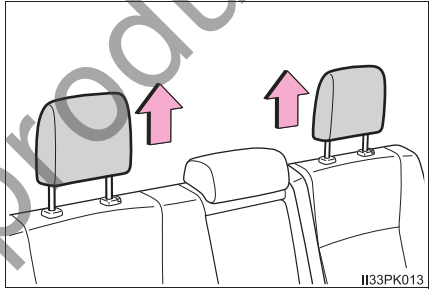

2 Pull the straps and raise the bottom cushions.

The latch under the bottom cushions will release allowing the bottom cushions to be raised.

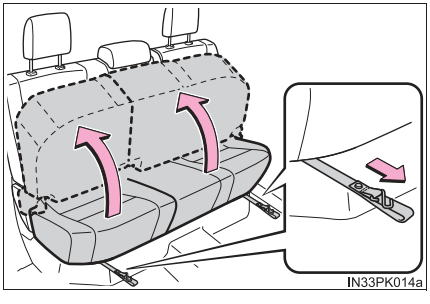

Not for Reproduction

3 Anchor the straps to the head restraints.

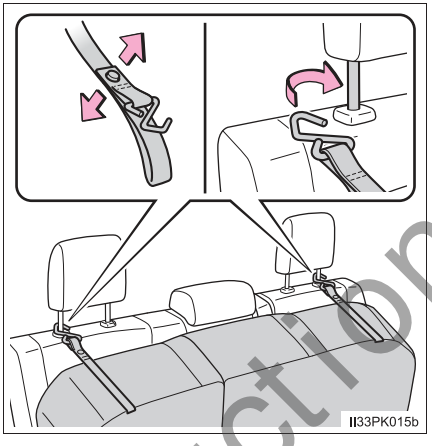

WARNING

Observe the following precautions. Failure to do so may result in death or serious injury.

■ **When removing the rear seat cushions or raising the bottom cushion**

- Do not operate the rear seat cushions or bottom cushion while driving.
- Stop the vehicle on level ground, apply the parking brake firmly and shift the shift position to P (automatic transmission) or N (manual transmission).

■ **When the rear seat cushions are removed**

Be careful not to hit the removed rear seat cushions against a person or drop it on yourself.

■ **When reinstalling the rear seat cushions or returning the bottom cushions to their original position**

- Be careful not to get your hands or feet pinched in the seat.
- Make sure there are no obstacles under the seat which would prevent the seat from properly locking into place.
- Make sure the rear seat cushions and bottom cushion are securely locked by pushing it upward and downward.
- Check that the seat belts are not twisted or caught in the bottom cushions.

Not for Reproduction

Head restraints

Head restraints are provided for all seats.

Front seats

▶ Adjustable type

① Up

Pull the head restraints up.

② Down

Push the head restraint down while pressing the lock release button.

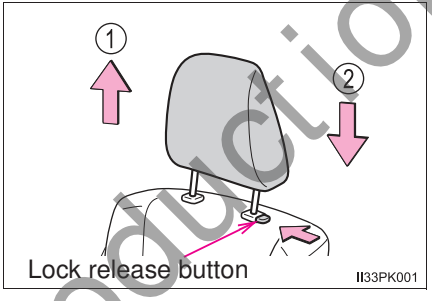

▶ Integrated type

Head restraints cannot be adjusted and removed.

Rear seats (if equipped)

▶ Adjustable type

① Up

Pull the head restraints up.

② Down

Push the head restraint down while pressing the lock release button.

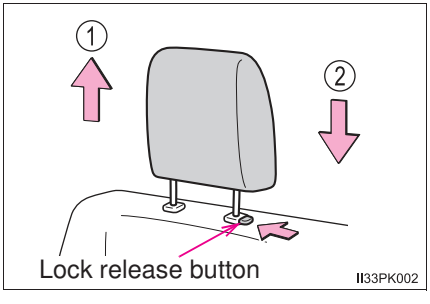

▶ Integrated type

Head restraints cannot be adjusted and removed.

Not for Reproduction

Removing the head restraints

Pull the head restraint up while pressing the lock release button.

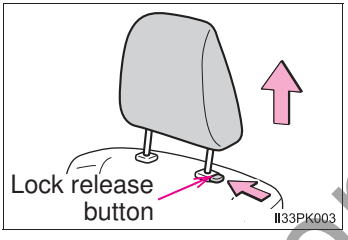

Installing the head restraints

Align the head restraint with the installation holes and push it down to the lock position.

Press and hold the lock release button when lowering the head restraint.

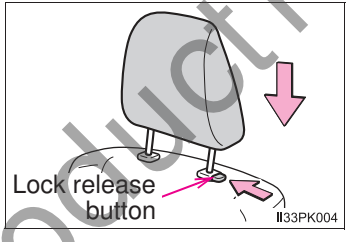

Adjusting the height of the head restraints

Make sure that the head restraints are adjusted so that the center of the head restraint is closest to the top of your ears.

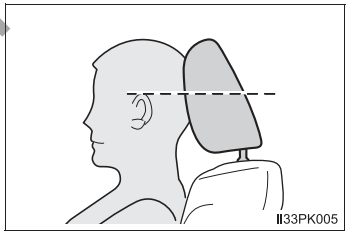

Adjusting the rear center seat head restraint (double-cab models only)

Always raise the head restraint one level from the stowed position when using.

Not for Reproduction

WARNING

■ **Head restraint precautions**

Observe the following precautions regarding the head restraints. Failure to do so may result in death or serious injury.

- Use the head restraints designed for each respective seat.
- Adjust the head restraints to the correct position at all times.
- After adjusting the head restraints, push down on them and make sure they are locked in position.
- Do not drive with the head restraints removed.

Not for Reproduction

Steering wheel

Adjustment procedure

1 Hold the steering wheel and push the lever down.

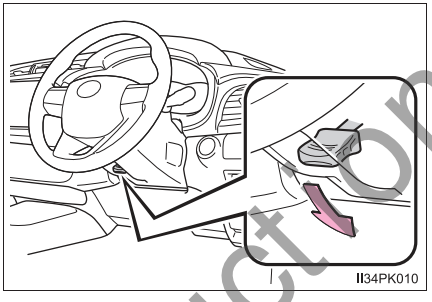

Type A

2 Adjust to the ideal position by moving the steering wheel vertically.

After adjustment, pull the lever up to secure the steering wheel.

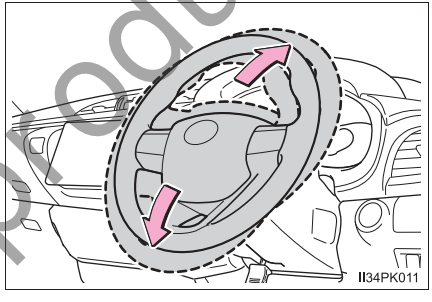

Type B

2 Adjust to the ideal position by moving the steering wheel horizontally and vertically.

After adjustment, pull the lever up to secure the steering wheel.

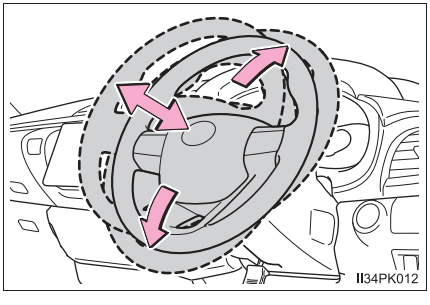

Not for Reproduction

Horn

To sound the horn, press on or close to the mark.

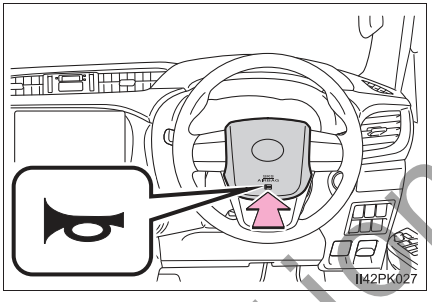

After adjusting the steering wheel

Make sure that the steering wheel is securely locked.
The horn may not sound if the steering wheel is not securely locked.

WARNING

Caution while driving

Do not adjust the steering wheel while driving.
Doing so may cause the driver to mishandle the vehicle and cause an accident, resulting in death or serious injury.

After adjusting the steering wheel

Make sure that the steering wheel is securely locked.
Otherwise, the steering wheel may move suddenly, possibly causing an accident, and resulting in death or serious injury.

Not for Reproduction

Inside rear view mirror

The rear view mirror's position can be adjusted to enable sufficient confirmation of the rear view.

Adjusting the height of rear view mirror

The height of the rear view mirror can be adjusted to suit your driving posture.

Adjust the height of the rear view mirror by moving it up and down.

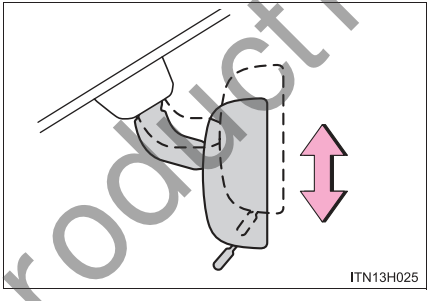

Anti-glare function

Reflected light from the headlights of vehicles behind can be reduced by operating the lever.

① Normal position

② Anti-glare position

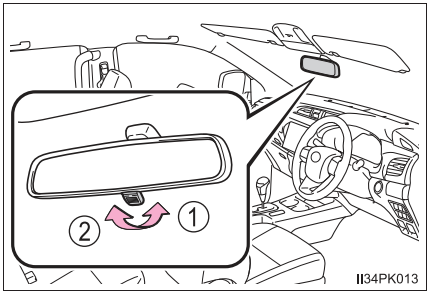

WARNING

Do not adjust the position of the mirror while driving.
Doing so may lead to mishandling of the vehicle and cause an accident, resulting in death or serious injury.

Not for Reproduction

Outside rear view mirrors

Adjustment procedure

1 To select a mirror to adjust, turn the switch.

① Left

② Right

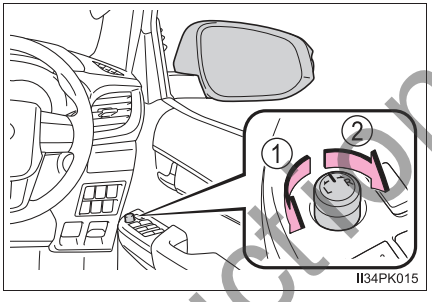

2 To adjust the mirror, move the switch.

① Up

② Right

③ Down

④ Left

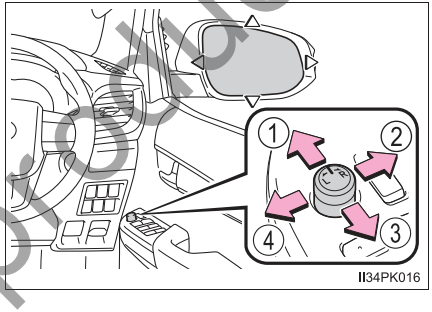

Not for Reproduction

Folding the mirrors

▶ Manual folding type

Push the mirror back in the direction of the vehicle's rear.

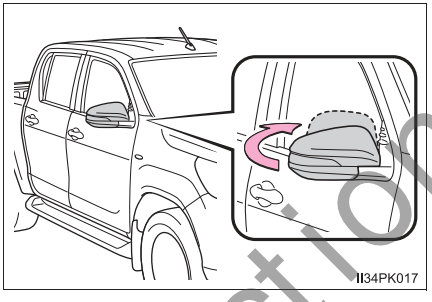

▶ Power folding type

Press the switch.

① Folding

② Extending

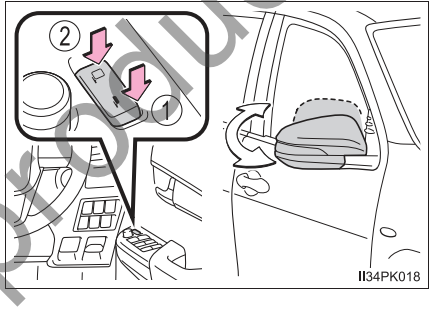

■ **Mirror angle can be adjusted when**

▶ Vehicles without smart entry & start system

The engine switch is in the "ACC" or "ON" position.

▶ Vehicles with smart entry & start system

The engine switch is in ACCESSORY or IGNITION ON mode.

Not for Reproduction

WARNING

■ Important points while driving

Observe the following precautions while driving.
Failure to do so may result in loss of control of the vehicle and cause an accident, resulting in death or serious injury.

- Do not adjust the mirrors while driving.
- Do not drive with the mirrors folded.
- Both the driver and passenger side mirrors must be extended and properly adjusted before driving.

■ When a mirror is moving

To avoid personal injury and mirror malfunction, be careful not to get your hand caught by the moving mirror.

NOTICE

■ If ice should jam the mirror

Do not operate the control or scrape the mirror face. Use a spray de-icer to free the mirror.

Not for Reproduction

Power windows

Opening and closing procedures

The power windows can be opened and closed using the switches.

Operating the switch moves the windows as follows:

▶ Type A

① Closing

② Opening

③ One-touch opening*
(driver's window only)

④ One-touch closing*
(driver's window only)

*: To stop the window partway, operate the switch in the opposite direction.

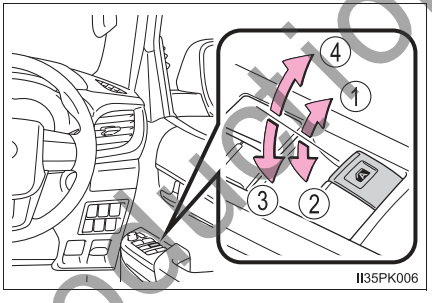

▶ Type B

① Closing

② Opening

③ One-touch opening*

④ One-touch closing*

*: To stop the window partway, operate the switch in the opposite direction.

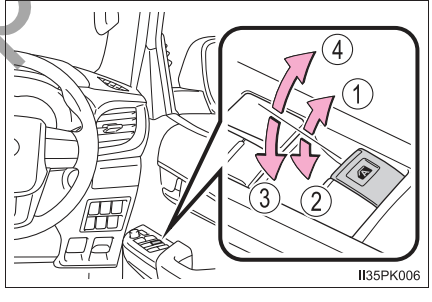

Not for Reproduction

Window lock switch

Press the switch down to lock the passenger window switches.

Use this switch to prevent children from accidentally opening or closing a passenger window.

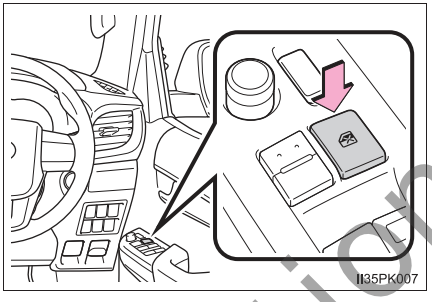

■ **The power windows can be operated when**

▶ Vehicles without smart entry & start system

The engine switch is in the “ON” position.

▶ Vehicles with smart entry & start system

The engine switch is in IGNITION ON mode.

■ **Jam protection function (windows with one-touch function only)**

If an object becomes jammed between the window and the window frame while the window is closing, window movement is stopped and the window is opened slightly.

■ **Catch protection function (windows with one-touch function only)**

If an object becomes caught between the door and window while the window is opening, window movement is stopped.

■ **Operating the power windows after turning the engine off**

▶ Vehicles without smart entry & start system

The power windows can be operated for approximately 45 seconds even after the engine switch is turned to the “ACC” or “LOCK” position. They cannot, however, be operated once either front door is opened.

▶ Vehicles with smart entry & start system

The power windows can be operated for approximately 45 seconds even after the engine switch is turned to ACCESSORY mode or turned off. They cannot, however, be operated once either front door is opened.

Not for Reproduction

■ When the window cannot be opened or closed (windows with one-touch function only)

When the jam protection function or catch protection function operates unusually and the window cannot be opened or closed, perform the following operations with the power window switch of that door.

- Stop the vehicle. With the engine switch in the “ON” position (vehicles without smart entry & start system) or IGNITION ON mode (vehicles with smart entry & start system), within 4 seconds of the jam protection function or catch protection function activating, continually operate the power window switch in the one-touch closing direction or one-touch opening direction so that the window can be opened and closed.
- If the window cannot be opened and closed even when performing the above operations, perform the following procedure for function initialization.

1. Turn the engine switch to the “ON” position (vehicles without smart entry & start system) or IGNITION ON mode (vehicles with smart entry & start system).
2. Pull and hold the power window switch in the one-touch closing direction and completely close the window.
3. Release the power window switch for a moment, resume pulling the switch in the one-touch closing direction, and hold it there for approximately 6 seconds or more.
4. Press and hold the power window switch in the one-touch opening direction. After the window is completely opened, continue holding the switch for an additional 1 second or more.
5. Release the power window switch for a moment, resume pushing the switch in the one-touch opening direction, and hold it there for approximately 4 seconds or more.
6. Pull and hold the power window switch in the one-touch closing direction again. After the window is completely closed, continue holding the switch for a further 1 second or more.

If you release the switch while the window is moving, start again from the beginning.
If the window reverses and cannot be fully closed or opened, have the vehicle inspected by your Toyota dealer.

Not for Reproduction

WARNING

Observe the following precautions.
Failure to do so may result in death or serious injury.

■ Closing the windows

- The driver is responsible for all the power window operations, including the operation for the passengers. In order to prevent accidental operation, especially by a child, do not let a child operate the power windows. It is possible for children and other passengers to have body parts caught in the power window. Also, when riding with a child, it is recommended to use the window lock switch. (→P. 138)
- Check to make sure that all passengers do not have any part of their body in a position where it could be caught when a window is being operated.
- When exiting the vehicle, turn the engine switch off, carry the key and exit the vehicle along with the child. There may be accidental operation, due to mischief, etc., that may possibly lead to an accident.

■ Jam protection function (windows with one-touch function only)

- Never use any part of your body to intentionally activate the jam protection function.
- The jam protection function may not work if something gets jammed just before the window is fully closed. Be careful not to get any part of your body jammed in the window.

■ Catch protection function (windows with one-touch function only)

- Never use any part of your body or clothing to intentionally activate the catch protection function.
- The catch protection function may not work if something gets caught just before the window is fully opened. Be careful not to get any part of your body or clothing caught in the window.

NOTICE

■ Jam protection function and catch protection function (windows with one-touch function only)

If the door is forcefully closed while the window is being opened or closed, the jam protection function or catch protection function may operate and the window may reverse directions or stop.

Not for Reproduction

Quarter windows (smart-cab models)

Opening and closing procedures

The quarter windows can be opened and closed using the latch handle.

To open the quarter windows, pull the latch handle toward you and swing it fully out.

To close the quarter windows, reverse the opening procedure.

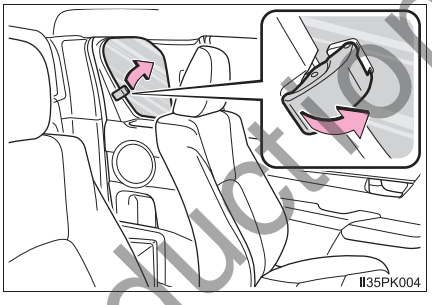

Closing the quarter windows

Make sure that the quarter windows are securely closed after closing them.

WARNING

Opening or closing the quarter windows

Observe the following precautions.
Failure to do so may result in death or serious injury.

- Check to make sure that all passengers do not have any part of their body in a position where it could be caught when a window is being operated.
- Do not allow children to operate the quarter windows.
  Closing a quarter window on someone can cause serious injury, and in some instances, even death.

Not for Reproduction

Not for Reproduction

Driving 4

4-1. Before driving
Driving the vehicle 144
Cargo and luggage 155
Trailer towing 156

4-2. Driving procedures
Engine (ignition) switch (vehicles without smart entry & start system).....167
Engine (ignition) switch (vehicles with smart entry & start system).....170
Automatic transmission 178
Manual transmission.....186
Turn signal lever 192
Parking brake 193

4-3. Operating the lights and wipers
Headlight switch 194
Fog light switch.....198
Windshield wipers and washer.....199

4-4. Refueling
Opening the fuel tank cap.....201

4-5. Using the driving support systems
Cruise control.....206
Rear view monitor system 210
Four-wheel drive system....220
Rear differential lock system 230
Driving assist systems 234
Downhill assist control system 241
DPF (Diesel Particulate Filter) system 244

4-6. Driving tips
Winter driving tips 250

Not for Reproduction

Driving the vehicle

The following procedures should be observed to ensure safe driving:

Starting the engine

→P. 167, 170

Driving

▶ Automatic transmission

1. With the brake pedal depressed, shift the shift lever to D. (→P. 178)
2. Release the parking brake. (→P. 193)
3. Gradually release the brake pedal and gently depress the accelerator pedal to accelerate the vehicle.

▶ Manual transmission

1. While depressing the clutch pedal, shift the shift lever to 1. (→P. 186)
2. Release the parking brake. (→P. 193)
3. Gradually release the clutch pedal. At the same time, gently depress the accelerator pedal to accelerate the vehicle.

Stopping

▶ Automatic transmission

1. With the shift lever in D, depress the brake pedal.
2. If necessary, set the parking brake.

   If the vehicle is to be stopped for an extended period of time, shift the shift lever to P or N. (→P. 178)

▶ Manual transmission

1. While depressing the clutch pedal, depress the brake pedal.
2. If necessary, set the parking brake.

   If the vehicle is to be stopped for an extended period of time, shift the shift lever to N. (→P. 186)

Not for Reproduction

Parking the vehicle

▶ Automatic transmission

1. With the shift lever in D, depress the brake pedal.
2. Set the parking brake (→P. 193), and shift the shift lever to P (→P. 178).
3. Vehicles without smart entry & start system:
   Turn the engine switch to the “LOCK” position to stop the engine.

   Vehicles with smart entry & start system:
   Press the engine switch to stop the engine.
4. Lock the door, making sure that you have the key on your person.

   If parking on a hill, block the wheels as needed.

▶ Manual transmission

1. While depressing the clutch pedal, depress the brake pedal.
2. Shift the shift lever to N. (→P. 186)

   If parking on a hill, shift the shift lever to 1 or R as needed.
3. Set the parking brake. (→P. 193)
4. Vehicles without smart entry & start system:
   Turn the engine switch to the “LOCK” position to stop the engine.

   Vehicles with smart entry & start system:
   Press the engine switch to stop the engine.
5. Lock the door, making sure that you have the key on your person.

   If parking on a hill, block the wheels as needed.

Not for Reproduction

Starting off on a steep uphill

▶ Automatic transmission

1. Make sure that the parking brake is set and shift the shift lever to D.
2. Gently depress the accelerator pedal.
3. Release the parking brake.

▶ Manual transmission

1. With the parking brake firmly set and the clutch pedal fully depressed, shift the shift lever to 1.
2. Lightly depress the accelerator pedal at the same time as gradually releasing the clutch pedal.
3. Release the parking brake.

■ When starting off on an uphill

The hill-start assist control will activate. (→P. 234)

■ Driving in the rain

- Drive carefully when it is raining, because visibility will be reduced, the windows may become fogged-up, and the road will be slippery.
- Drive carefully when it starts to rain, because the road surface will be especially slippery.
- Refrain from high speeds when driving on an expressway in the rain, because there may be a layer of water between the tires and the road surface, preventing the steering and brakes from operating properly.

■ Engine speed while driving (automatic transmission)

In the following conditions, the engine speed may become high while driving. This is due to automatic up-shifting control or down-shifting implementation to meet driving conditions. It does not indicate sudden acceleration.

- The vehicle is judged to be driving uphill or downhill
- When the accelerator pedal is released

■ Restraining the engine output (Brake Override System)

- When the accelerator and brake pedals are depressed at the same time, the engine output may be restrained.
- Vehicles without multi-information display: A warning light comes on while the system is operating. (→P. 464)
- Vehicles with multi-information display: A warning message is displayed on the multi-information display while the system is operating. (→P. 471)

Not for Reproduction

Breaking in your new Toyota

To extend the life of the vehicle, observing the following precautions is recommended:

- For the first 300 km (200 miles):
  Avoid sudden stops.
- For the first 800 km (500 miles):
  Do not tow a trailer. (→P. 156)
- For the first 1000 km (600 miles):
  - Do not drive at extremely high speeds.
  - Avoid sudden acceleration.
  - Do not drive continuously in the low gears.
  - Do not drive at a constant speed for extended periods.
  - Do not drive slowly with the manual transmission in a high gear.

Idling time before engine stop (diesel engine only)

To prevent damage to the turbocharger, allow the engine to idle immediately after high-load driving.

Driving condition	Idling time
Normal city driving or high-speed driving (at the highway speed limit or recommended speed)	Not necessary
Steep hill driving, continuous driving (race track driving etc.), or towing a trailer or another vehicle	Approximately 1 minute

Operating your vehicle in a foreign country

Comply with the relevant vehicle registration laws and confirm the availability of the correct fuel. (→P. 513)

Eco-friendly driving

→P. 80

Not for Reproduction

WARNING

Observe the following precautions.
Failure to do so may result in death or serious injury.

■ When starting the vehicle

On vehicles with automatic transmission, always keep your foot on the brake pedal while stopped with the engine running. This prevents the vehicle from creeping.

■ When driving the vehicle

● Do not drive if you are unfamiliar with the location of the brake and accelerator pedals to avoid depressing the wrong pedal.

- Accidentally depressing the accelerator pedal instead of the brake pedal will result in sudden acceleration that may lead to an accident.
- When backing up, you may twist your body around, leading to a difficulty in operating the pedals. Make sure to operate the pedals properly.
- Make sure to keep a correct driving posture even when moving the vehicle only slightly. This allows you to depress the brake and accelerator pedals properly.
- Depress the brake pedal using your right foot. Depressing the brake pedal using your left foot may delay response in an emergency, resulting in an accident.

● Do not drive the vehicle over or stop the vehicle near flammable materials. The exhaust system and exhaust gases can be extremely hot. These hot parts may cause a fire if there is any flammable material nearby.

● During normal driving, do not turn off the engine. Turning the engine off while driving will not cause loss of steering or braking control, but the power assist to these systems will be lost. This will make it more difficult to steer and brake, so you should pull over and stop the vehicle as soon as it is safe to do so.
However, in the event of an emergency, such as if it becomes impossible to stop the vehicle in the normal way: →P. 451

● Use engine braking (downshift) to maintain a safe speed when driving down a steep hill.
Using the brakes continuously may cause the brakes to overheat and lose effectiveness. (→P. 179)

Not for Reproduction

WARNING

Observe the following precautions.
Failure to do so may result in death or serious injury.

■ When driving the vehicle

- Do not adjust the positions of the steering wheel, the seat, or the inside or outside rear view mirrors while driving.
  Doing so may result in a loss of vehicle control.
- Always check that all passengers' arms, heads or other parts of their body are not outside the vehicle.
- Do not drive the vehicle off-road.
  4WD models only: This is not a 4WD vehicle designed for off-road driving. Proceed with all due caution if it becomes unavoidable to drive off-road.
- Do not drive across a river or through other bodies of water.
  This may cause electric/electronic components to short circuit, damage the engine or cause other serious damage to the vehicle.
- On vehicles with manual transmission, do not operate the clutch halfway for a long period of time unless it is necessary. Doing so could not only speed up clutch wear, but could also damage the clutch or even cause a fatal accident such as vehicle fire.

■ When driving on slippery road surfaces

- Sudden braking, acceleration and steering may cause tire slippage and reduce your ability to control the vehicle.
- Sudden acceleration, engine braking due to shifting, or changes in engine speed could cause the vehicle to skid.
- After driving through a puddle, lightly depress the brake pedal to make sure that the brakes are functioning properly. Wet brake pads may prevent the brakes from functioning properly. If the brakes on only one side are wet and not functioning properly, steering control may be affected.

Not for Reproduction

WARNING

Observe the following precautions.
Failure to do so may result in death or serious injury.

■ When shifting the shift lever

- On vehicles with automatic transmission, do not let the vehicle roll backwards while the shift lever is in a driving position, or roll forward while the shift lever is in R.
  Doing so may cause the engine to stall or lead to poor brake and steering performance, resulting in an accident or damage to the vehicle.
- On vehicles with automatic transmission, do not shift the shift lever to P while the vehicle is moving.
  Doing so can damage the transmission and may result in a loss of vehicle control.
- Do not shift the shift lever to R while the vehicle is moving forward.
  Doing so can damage the transmission and may result in a loss of vehicle control.
- Do not shift the shift lever to a driving position while the vehicle is moving backward.
  Doing so can damage to the transmission and may result in a loss of vehicle control.
- Moving the shift lever to N while the vehicle is moving will disengage the engine from the transmission. Engine braking is not available when N is selected.
- On vehicles with automatic transmission, be careful not to shift the shift lever with the accelerator pedal depressed. Shifting the shift lever to a gear other than P or N may lead to unexpected rapid acceleration of the vehicle that may cause an accident.

■ If you hear a squealing or scraping noise (brake pad wear indicators)

Have the brake pads checked and replaced by your Toyota dealer as soon as possible.
Rotor damage may result if the pads are not replaced when needed.

It is dangerous to drive the vehicle when the wear limits of the brake pads and/or those of the brake discs are exceeded.

Not for Reproduction

WARNING

Observe the following precautions.
Failure to do so may result in death or serious injury.

■ When the vehicle is stopped

- Do not race the engine.
  If the vehicle is in any gear other than P (vehicles with automatic transmission only) or N, the vehicle may accelerate suddenly and unexpectedly, causing an accident.
- On vehicles with automatic transmission, in order to prevent accidents due to the vehicle rolling away, always keep depressing the brake pedal while the engine is running, and apply the parking brake as necessary.
- If the vehicle is stopped on an incline, in order to prevent accidents caused by the vehicle rolling forward or backward, always depress the brake pedal and securely apply the parking brake as needed.
- Avoid revving or racing the engine.
  Running the engine at high speed while the vehicle is stopped may cause the exhaust system to overheat, which could result in a fire if combustible material is nearby.

■ When the vehicle is parked

- Do not leave glasses, cigarette lighters, spray cans, or soft drink cans in the vehicle when it is in the sun.
  Doing so may result in the following:
  - Gas may leak from a cigarette lighter or spray can, and may lead to a fire.
  - The temperature inside the vehicle may cause the plastic lenses and plastic material of glasses to deform or crack.
  - Soft drink cans may fracture, causing the contents to spray over the interior of the vehicle, and may also cause a short circuit in the vehicle's electrical components.
- Do not leave cigarette lighters in the vehicle. If a cigarette lighter is in a place such as the glove box or on the floor, it may be lit accidentally when luggage is loaded or the seat is adjusted, causing a fire.
- Do not attach adhesive discs to the windshield or windows. Do not place containers such as air fresheners on the instrument panel or dashboard. Adhesive discs or containers may act as lenses, causing a fire in the vehicle.
- Do not leave a door or window open if the curved glass is coated with a metallized film such as a silver-colored one. Reflected sunlight may cause the glass to act as a lens, causing a fire.

Not for Reproduction

WARNING

Observe the following precautions.
Failure to do so may result in death or serious injury.

■ When the vehicle is parked

- Always apply the parking brake, shift the shift lever to P (vehicles with automatic transmission only), stop the engine and lock the vehicle.
  Do not leave the vehicle unattended while the engine is running.
  If the vehicle is parked with the shift lever in P but the parking brake is not set, the vehicle may start to move, possibly leading to an accident.
- Do not touch the exhaust pipes while the engine is running or immediately after turning the engine off.
  Doing so may cause burns.

■ When taking a nap in the vehicle

Always turn the engine off. Otherwise, if you accidentally move the shift lever or depress the accelerator pedal, this could cause an accident or fire due to engine overheating. Additionally, if the vehicle is parked in a poorly ventilated area, exhaust gases may collect and enter the vehicle, leading to death or a serious health hazard.

■ When braking

- When the brakes are wet, drive more cautiously.
  Braking distance increases when the brakes are wet, and this may cause one side of the vehicle to brake differently than the other side. Also, the parking brake may not securely hold the vehicle.
- If the power brake assist function does not operate, do not follow other vehicles closely and avoid hills or sharp turns that require braking. In this case, braking is still possible, but the brake pedal should be depressed more firmly than usual. Also, the braking distance will increase. Have your brakes fixed immediately.
- Do not pump the brake pedal if the engine stalls.
  Each push on the brake pedal uses up the reserve for the power-assisted brakes.
- The brake system consists of 2 individual hydraulic systems: If one of the systems fails, the other will still operate. In this case, the brake pedal should be depressed more firmly than usual and the braking distance will increase.
  Have your brakes fixed immediately.

■ If the vehicle becomes stuck (4WD models)

Do not spin the wheels excessively when any of the tires is up in the air, or the vehicle is stuck in sand, mud, etc. This may damage the driveline components or propel the vehicle forward or backward, causing an accident.

Not for Reproduction

NOTICE

■ **When driving the vehicle**

- Do not depress the accelerator and brake pedals at the same time during driving, as this may restrain the engine output.
- On vehicles with automatic transmission, do not use the accelerator pedal or depress the accelerator and brake pedals at the same time to hold the vehicle on a hill.
- On vehicles with manual transmission, do not shift gears unless the clutch pedal is fully depressed. After shifting, do not release the clutch pedal abruptly. Doing so may damage the clutch, transmission and gears.
- On vehicles with manual transmission, observe the following to prevent the clutch from being damaged.
  - Do not rest your foot on the clutch pedal while driving.
    Doing so may cause clutch trouble.
  - Do not use any gear other than the 1st gear when starting off and moving forward.
    Doing so may damage the clutch.
  - Do not use the clutch to hold the vehicle when stopping on an uphill grade.
    Doing so may damage the clutch.
- On vehicles with manual transmission, do not shift the shift lever to R when the vehicle is still moving. Doing so may damage the clutch, transmission and gears.
- On vehicles with manual transmission, if you cannot accelerate the vehicle even when the clutch is engaged and the accelerator pedal is depressed, this may mean that the clutch is slipping, and the vehicle may be rendered undriveable. Have your Toyota dealer inspect the vehicle as soon as possible.

Not for Reproduction

NOTICE

■ **When parking the vehicle**

On vehicles with automatic transmission, always set the parking brake, and shift the shift lever to P. Failure to do so may cause the vehicle to move or the vehicle may accelerate suddenly if the accelerator pedal is accidentally depressed.

■ **Avoiding damage to vehicle parts**

- Do not turn the steering wheel fully in either direction and hold it there for an extended period of time.
  Doing so may damage the power steering pump.
- When driving over bumps in the road, drive as slowly as possible to avoid damaging the wheels, underside of the vehicle, etc.
- Diesel engine: Make sure to idle the engine immediately after high-load driving. Stop the engine only after the turbocharger has cooled down.
  Failure to do so may cause damage to the turbocharger.

■ **If you get a flat tire while driving**

A flat or damaged tire may cause the following situations. Hold the steering wheel firmly and gradually depress the brake pedal to slow down the vehicle.

- It may be difficult to control your vehicle.
- The vehicle will make abnormal sounds or vibrations.
- The vehicle will lean abnormally.

Information on what to do in case of a flat tire. (→P. 474)

■ **When encountering flooded roads**

Do not drive on a road that has flooded after heavy rain etc. Doing so may cause the following serious damage to the vehicle:

- Engine stalling
- Short in electrical components
- Engine damage caused by water immersion

In the event that you drive on a flooded road and the vehicle is flooded, be sure to have your Toyota dealer check the following:

- Brake function
- Changes in quantity and quality of oil and fluid used for the engine, transmission, transfer (4WD models), differential, etc.
- Lubricant condition for the propeller shaft, bearings and suspension joints (where possible), and the function of all joints, bearings, etc.

Not for Reproduction

Cargo and luggage

Take notice of the following information about storage precautions, cargo capacity and load.

WARNING

■ **Things that must not be carried in the rear deck**

The following things may cause a fire if loaded in the rear deck:

- Receptacles containing gasoline
- Aerosol cans

■ **Storage precautions**

Observe the following precautions.
Failure to do so may prevent the pedals from being depressed properly, may block the driver's vision, or may result in items hitting the driver or passengers, possibly causing an accident.

- Stow cargo and luggage in the rear deck whenever possible.
- Except for single-cab models: Do not stack anything behind the front seats higher than the seatbacks.
- Do not place cargo or luggage in or on the following locations.
  - At the feet of the driver
  - On the front passenger or rear seats (if equipped) (when stacking items)
  - On the instrument panel
  - On the dashboard
- Secure all items in the occupant compartment.
- Never allow anyone to ride in the rear deck. It is not designed for passengers. They should ride in their seats with their seat belts properly fastened. Otherwise, they are much more likely to suffer death or serious bodily injury, in the event of sudden braking, sudden swerving or an accident.

■ **Load and distribution**

- Do not overload your vehicle.
- Do not apply loads unevenly.
  Improper loading may cause deterioration of steering or braking control which may cause death or serious injury.

Not for Reproduction

Trailer towing

Your vehicle is designed primarily as a passenger-and-load-carrying vehicle. Towing a trailer will have an adverse effect on handling, performance, braking, durability, and fuel consumption. For your safety and the safety of others, do not overload the vehicle or trailer.

Toyota warranties do not apply to damage or malfunction caused by towing a trailer for commercial purposes.

For towing purposes, Toyota recommends the use of the following parts:

- When towing a caravan trailer etc., use a distributing hitch.
- When the total trailer weight is greater than the vehicle weight, use a sway control device.

◆ Weight limits

Confirm that the total trailer weight, gross vehicle weight, gross axle weight and trailer tongue load are all within the limits.

Not for Reproduction

◆ Gross vehicle weight*

The gross vehicle weight must not exceed the following:

▶ 2WD models

Single-cab models: 2700 kg (5952 lb.) [gasoline engine]
2810 kg (6195 lb.) [diesel engine]

Smart-cab models: 2810 kg (6195 lb.)

Double-cab models: 2780 kg (6129 lb.) [2TR-FE engine]
2810 kg (6195 lb.) [1GR-FE engine]
2860 kg (6305 lb.) [diesel engine]

▶ 4WD models

Single-cab models: 3000 kg (6614 lb.)

Smart-cab models: 3000 kg (6614 lb.) [2GD-FTV engine]
3050 kg (6724 lb.) [1GD-FTV engine]

Double-cab models: 3000 kg (6614 lb.)

▶ Pre-Runner

Smart-cab models: 2560 kg (5644 lb.)

Double-cab models: 2930 kg (6460 lb.) [1GD-FTV engine]
3050 kg (6724 lb.) [2GD-FTV engine]

The gross vehicle weight is the sum weight of the unloaded vehicle, driver, passengers, luggage, hitch and trailer tongue load. Also included is the weight of any special equipment installed on your vehicle.

*: The weights listed are the values considering installing bull bars.

◆ Gross axle weight

The load on either the front or rear axle resulting from distribution of the gross vehicle weight on both axles must not exceed the following:

▶ 2WD models

Front: 1200 kg (2646 lb.)
Rear: 1750 kg (3858 lb.)

▶ 4WD models and Pre-Runner

Front: 1450 kg (3197 lb.)
Rear: 1700 kg (3748 lb.)

Not for Reproduction

◆ Trailer tongue load

The trailer cargo load should be distributed so that the tongue load is 9 to 11% of the total trailer weight, not exceed the following:

▶ 2WD models

250 kg (551 lb.)

▶ 4WD models

1GR-FE engine: 300 kg (661 lb.)

1GD-FTV engine: 320 kg (705 lb.) [single-cab models with automatic transmission]
350 kg (772 lb.) [single-cab models with manual transmission]
350 kg (772 lb.) [smart-cab models]
320 kg (705 lb.) [double-cab models with automatic transmission]
350 kg (772 lb.) [double-cab models with manual transmission]

2GD-FTV engine: 300 kg (661 lb.) [automatic transmission]
320 kg (705 lb.) [manual transmission]

▶ Pre-Runner

280 kg (617 lb.)

(Tongue load/Total trailer weight × 100 = 9 to 11%)

The total trailer weight and tongue load can be measured with platform scales found at a highway weighing stations, building supply companies, trucking companies, junk yards, etc.

① Total trailer weight

② Tongue load

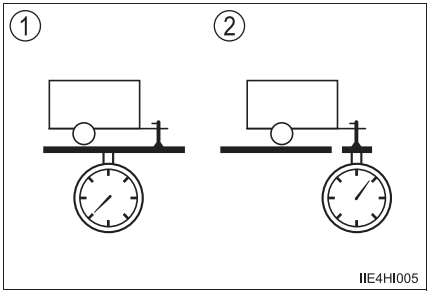

Not for Reproduction

Towing a trailer

Contact your Toyota dealer for further information about additional requirements such as a towing kits etc.

Hitch

Trailer hitch assemblies have different weight capacities established by the hitch manufacturer. Even though the vehicle may be rated for towing a higher weight, the operator must never exceed the maximum weight rating specified for the trailer hitch.

Selecting a trailer ball

Use the correct trailer ball for your application.

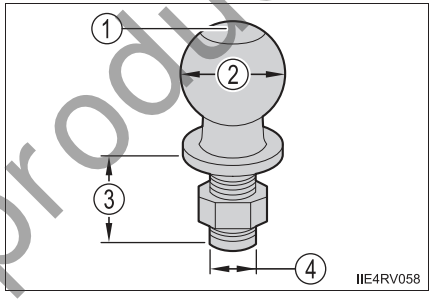

① Trailer ball load rating

Matches or exceeds the gross trailer weight rating of the trailer.

② Ball diameter

Matches the size of the trailer coupler. Most couplers are stamped with the required trailer ball size.

③ Shank length

Protrudes beyond the bottom of the lock washer and nut at least 2 threads.

④ Shank diameter

Matches the ball mount hole diameter size.

Not for Reproduction

Before towing

Check that the following conditions are met:

- The vehicle's tires are properly inflated. (→P. 524)
- Trailer tires are inflated according to the trailer manufacturer's recommendation.
- All trailer lights work.
- All lights work each time you connect them.
- The trailer ball is set up at the proper height for the coupler on the trailer.
- The trailer is level when it is hitched.
  Do not drive if the trailer is not level, and check for improper tongue weight, overloading, worn suspension, or other possible causes.
- The trailer cargo is securely loaded.
- The rear view mirrors conform to all applicable federal, state/provincial or local regulations. If they do not, install rear view mirrors appropriate for towing purposes.

Break-in schedule

Toyota recommends that you do not use a new vehicle or a vehicle with any new power train components (engine, transmission, differential, wheel bearings, etc.) to tow a trailer for the first 800 km (500 miles) of driving.

Maintenance

- If you tow a trailer, your vehicle will require more frequent maintenance due to the additional load. (See "Warranty and Service Booklet".)
- Retighten the fixing bolts of the towing ball and bracket after approximately 1000 km (600 miles) of trailer towing.

Not for Reproduction

■ If trailer sway occurs

One or more factors (crosswinds, passing vehicles, rough roads, etc.) can adversely affect handling of your vehicle and trailer, causing instability.

● If trailer swaying occurs:

- Firmly grip the steering wheel. Steer straight ahead.
  Do not try to control trailer swaying by turning the steering wheel.
- Begin releasing the accelerator pedal immediately but very gradually to reduce speed.
  Do not increase speed. Do not apply vehicle brakes.

If you make no extreme correction with the steering or brakes, your vehicle and trailer should stabilize (if enabled, Trailer Sway Control can also help to stabilize the vehicle and trailer.).

● After the trailer swaying has stopped:

- Stop in a safe place. Get all occupants out of the vehicle.
- Check the tires of the vehicle and the trailer.
- Check the load in the trailer.
  Make sure the load has not shifted.
  Make sure the tongue weight is appropriate, if possible.
- Check the load in the vehicle.
  Make sure the vehicle is not overloaded after occupants get in.

If you cannot find any problems, the speed at which trailer swaying occurred is beyond the limit of your particular vehicle-trailer combination. Drive at a lower speed to prevent instability. Remember that swaying of the towing vehicle-trailer increases as speed increases.

Not for Reproduction

WARNING

■ **To avoid accident or injury**

● The total trailer weight (trailer weight plus the weight of cargo) must not exceed the following:

▶ 2WD models

2500 kg (5512 lb.)

▶ 4WD models

1GR-FE engine:	3000 kg (6614 lb.)
1GD-FTV engine:	3200 kg (7055 lb.) [single-cab models with automatic transmission] 3500 kg (7716 lb.) [single-cab models with manual transmission] 3500 kg (7716 lb.) [smart-cab models] 3200 kg (7055 lb.) [double-cab models with automatic transmission] 3500 kg (7716 lb.) [double-cab models with manual transmission]
2GD-FTV engine:	3000 kg (6614 lb.) [automatic transmission] 3200 kg (7055 lb.) [manual transmission]

▶ Pre-Runner

2800 kg (6173 lb.)

● The gross combined weight (sum of your vehicle weight plus its load and the total trailer weight) must not exceed the following:

▶ 2WD models

Double-cab models: 5250 kg (11574 lb.) [2TR-FE engine]

▶ 4WD models

Single-cab models:	5650 kg (12456 lb.) [automatic transmission] 5850 kg (12897 lb.) [manual transmission]
Smart-cab models:	5650 kg (12456 lb.) [automatic transmission] 5850 kg (12897 lb.) [manual transmission]
Double-cab models:	5650 kg (12456 lb.) [diesel engine with automatic transmission] 5750 kg (12677 lb.) [gasoline engine] 5850 kg (12897 lb.) [diesel engine with manual transmission]

▶ Pre-Runner

Double-cab models: 5650 kg (12456 lb.)

Not for Reproduction

WARNING

- Do not exceed the trailer hitch assembly weight, gross vehicle weight, gross axle weight and trailer tongue load capacities.
- Never load more weight in the back than in the front of the trailer. About 60% of the load should be in the front half of the trailer, and the remaining 40% in the rear.

Hitches

- Use only a hitch that conforms to the total trailer weight requirement.
- Follow the directions supplied by the hitch manufacturer.
- Depending on the type of trailer coupler you use, the trailer ball may need to be coated with grease. If so, apply grease to the trailer ball in accordance with the instructions of the manufacturer of the trailer coupler.
- Remove the trailer hitch whenever you are not towing a trailer. After removing the hitch, seal any mounting holes in the vehicle body to prevent entry of any substances into the vehicle.

When towing a trailer

- If the total trailer weight exceeds 750 kg (1653 lb.), trailer brakes are required.
- Never tap into your vehicle's hydraulic system, as this will lower the vehicle's braking effectiveness.
- Never tow a trailer without using a safety chain securely attached to both the trailer and the vehicle. If damage occurs to the coupling unit or hitch ball, there is a risk of the trailer wandering into another lane.

NOTICE

When installing a trailer hitch

- Use only the position recommended by your Toyota dealer. Do not install the trailer hitch on the bumper; this may cause body damage.
- Do not use axle-mounted hitches, as they can cause damage to the axle housing, wheel bearings, wheels or tires.

Brakes

Toyota recommends trailers with brakes that conform to all applicable federal and state/provincial regulations.

Do not directly splice trailer lights

Directly splicing trailer lights may damage your vehicle's electrical system and cause a malfunction.

Not for Reproduction

Trailer towing tips

Your vehicle will handle differently when towing a trailer. In order to avoid accident, death or serious injury, keep the following in mind when towing:

- Before starting out, check the trailer lights and the vehicle-trailer connections. Recheck after driving a short distance.
- Practice turning, stopping and reversing with the trailer attached in an area away from traffic until you become accustomed to the feel of the vehicle.
- Reversing with a trailer attached is difficult and requires practice. Grip the bottom of the steering wheel and move your hand to the left to move the trailer to the left. Move your hand to the right to move the trailer to right. (This is generally opposite to reversing without a trailer attached.) Avoid sharp or prolonged turning. Have someone guide you when reversing to reduce the risk of an accident.
- As stopping distance is increased when towing a trailer, vehicle-to-vehicle distance should be increased. For each 16 km/h (10 mph) of speed, allow at least one vehicle and trailer length.
- Avoid sudden braking as you may skid, resulting in jackknifing and loss of control. This is especially true on wet or slippery surfaces.
- Avoid jerky starts or sudden acceleration.
- Avoid jerky steering and sharp turns, and slow down before making turns.
- Note that when making a turn, the trailer wheels will be closer than the vehicle wheels to the inside of the turn. Compensate by making a larger than normal turning radius.

Not for Reproduction

- Crosswinds and rough roads will adversely affect handling of your vehicle and trailer, causing sway. Periodically check the rear to prepare for being passed by large trucks or buses, which may cause your vehicle and trailer to sway. If swaying occurs, firmly grip the steering wheel, reduce speed immediately but gradually, and steer straight ahead. Never increase speed. If you make no extreme correction with the steering or brakes, your vehicle and trailer will stabilize.
- Take care when passing other vehicles. Passing requires considerable distance. After passing a vehicle, do not forget the length of your trailer, and be sure you have plenty of room before changing lanes.
- Vehicles with manual transmission: To maintain engine braking efficiency and changing system performance when using engine braking, do not use 5th gear (5-speed manual transmission) or 5th gear and 6th gear (6-speed manual transmission).
  Vehicles with automatic transmission: To maintain engine braking efficiency and changing system performance when using engine braking, do not use the transmission in D. Transmission shift range position must be in 4 or lower, in S mode.
- Due to the added load of the trailer, your vehicle's engine may overheat on hot days (at temperatures over 30°C [85°F]) when driving up a long or steep grade. If the engine coolant temperature gauge indicates overheating, immediately turn off the air conditioning (if in use), pull your vehicle off the road and stop in a safe spot.
  (→P. 499)

Not for Reproduction

- Always place wheel blocks under both the vehicle and the trailer wheels when parking. Apply the parking brake firmly, and put the transmission in P (automatic transmission) or in the 1st or R (manual transmission). Avoid parking on a slope, but if unavoidable, do so only after performing the following:

  1. Apply the brakes and keep them applied.
  2. Have someone place wheel blocks under both the vehicle and trailer wheels.
  3. When the wheel blocks are in place, release the brakes slowly until the blocks absorb the load.
  4. Apply the parking brake firmly.
  5. Shift into the 1st or R (manual transmission) or P (automatic transmission) and turn off the engine.

- When restarting after parking on a slope:

  1. With the transmission in the P position (automatic transmission) or the clutch pedal (manual transmission) depressed, start the engine. On vehicles with automatic transmission, be sure to keep the brake pedal depressed.
  2. Shift into 3, 2, 1, or the R position (if reversing).
  3. Release the parking brake (also brake pedal on vehicles with automatic transmission), and slowly pull or back away from the wheel blocks. Stop and apply the brakes.
  4. Have someone retrieve the blocks.

WARNING

■ To avoid an accident

- Observe the legal maximum speeds for trailer towing.
- Slow down and downshift before descending steep or long downhill grades. Do not make sudden downshifts while descending steep or long downhill grades.
- Avoid holding the brake pedal down too long or applying the brakes too frequently. This could cause the brakes to overheat and result in reduced braking efficiency.
- Do not use cruise control (if equipped) when trailer towing.

Not for Reproduction

Engine (ignition) switch (vehicles without smart entry & start system)

Starting the engine

▶ Automatic transmission (gasoline engine)

1. Check that the parking brake is set.
2. Check that the shift lever is set in P.
3. Firmly depress the brake pedal.
4. Turn the engine switch to the “START” position to start the engine.

▶ Automatic transmission (diesel engine)

1. Check that the parking brake is set.
2. Check that the shift lever is set in P.
3. Firmly depress the brake pedal.
4. Turn the engine switch to the “ON” position.
   The indicator turns on.
5. After the indicator light goes out, turn the engine switch to the “START” position to start the engine.

▶ Manual transmission (gasoline engine)

1. Check that the parking brake is set.
2. Check that the shift lever is set in N.
3. Firmly depress the clutch pedal.
4. Turn the engine switch to the “START” position to start the engine.

Not for Reproduction

▶ Manual transmission (diesel engine)

1 Check that the parking brake is set.

2 Check that the shift lever is set in N.

3 Firmly depress the clutch pedal.

4 Turn the engine switch to the “ON” position.

The indicator turns on.

5 After the indicator light goes out, turn the engine switch to the “START” position to start the engine.

Changing the engine switch positions

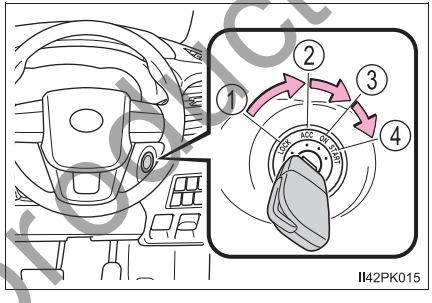

① “LOCK”

The steering wheel is locked and the key can be removed. (Vehicles with automatic transmission: The key can be removed only when the shift lever is in P.)

② “ACC”

Some electrical components such as the audio system can be used.

③ “ON”

All electrical components can be used.

④ “START”

For starting the engine.

■Turning the key from “ACC” to “LOCK”

1 Shift the shift lever to P (automatic transmission) or N (manual transmission). (→P. 178, 186)

2 Push in the key and turn it to the “LOCK” position.

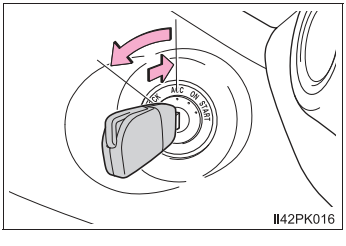

■If the engine does not start

The engine immobilizer system may not have been deactivated. (→P. 71)
Contact your Toyota dealer.

Not for Reproduction

When the steering lock cannot be released

When starting the engine, the engine switch may seem stuck in the “LOCK” position. To free it, turn the key while turning the steering wheel slightly left and right.

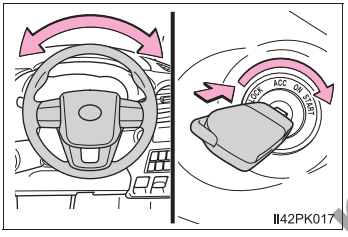

Key reminder function

A buzzer sounds if the driver’s door is opened while the engine switch is in the “LOCK” or “ACC” position to remind you to remove the key.

WARNING

When starting the engine

Always start the engine while sitting in the driver’s seat. Do not depress the accelerator pedal while starting the engine under any circumstances. Doing so may cause an accident resulting in death or serious injury.

Caution when driving

Do not turn the engine switch to the “LOCK” position while driving.
If in an emergency, you must turn the engine off while the vehicle is moving, turn the engine switch only to the “ACC” position to stop the engine. An accident may result if the engine is stopped while driving. (→P. 451)

NOTICE

To prevent battery discharge

Do not leave the engine switch in the “ACC” or “ON” position for long periods of time without the engine running.

When starting the engine

- Do not crank the engine for more than 30 seconds at a time. This may overheat the starter and wiring system.
- Do not race a cold engine.
- If the engine becomes difficult to start or stalls frequently, have your vehicle checked by your Toyota dealer immediately.

Not for Reproduction

Engine (ignition) switch (vehicles with smart entry & start system)

Performing the following operations when carrying the electronic key on your person starts the engine or changes engine switch modes.

Starting the engine

▶ Automatic transmission

1 Check that the parking brake is set.

2 Check that the shift lever is set in P.

3 Firmly depress the brake pedal.

A message will be displayed on the multi-information display. If it is not displayed, the engine cannot be started.

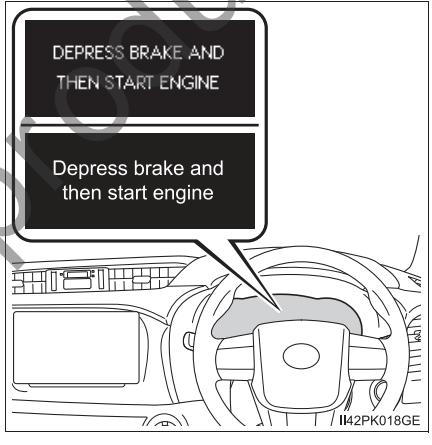

4 Press the engine switch shortly and firmly.

When operating the engine switch, one short, firm press is enough. It is not necessary to press and hold the switch.

The engine will crank until it starts or for up to 30 seconds, whichever is less.

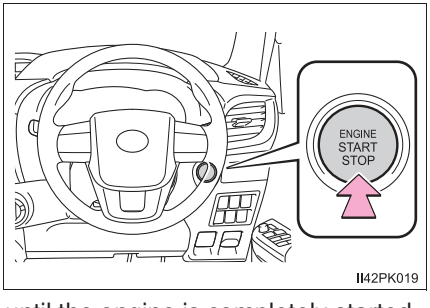

Continue depressing the brake pedal until the engine is completely started.

Diesel engine only: the indicator turns on. The engine will start after the indicator light goes out.

The engine can be started from any engine switch mode.

Not for Reproduction

▶ Manual transmission

1 Check that the parking brake is set.

2 Check that the shift lever is set in N.

3 Firmly depress the clutch pedal.

A message will be displayed on the multi-information display. If it is not displayed, the engine cannot be started.

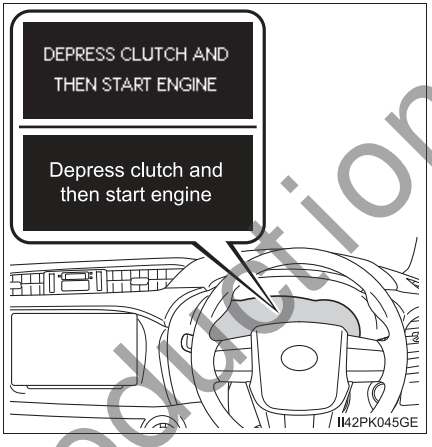

4 Press the engine switch shortly and firmly.

When operating the engine switch, one short, firm press is enough. It is not necessary to press and hold the switch.

The engine will crank until it starts or for up to 30 seconds, whichever is less.

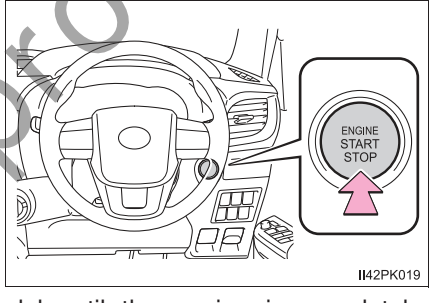

Continue depressing the clutch pedal until the engine is completely started.

Diesel engine only: the indicator turns on. The engine will start after the indicator light goes out.

The engine can be started from any engine switch mode.

Not for Reproduction

Stopping the engine

▶ Automatic transmission

1. Stop the vehicle.
2. Set the parking brake (→P. 193), and shift the shift lever to P.
3. Press the engine switch.
4. Release the brake pedal and check that the display on the instrument cluster is off.

▶ Manual transmission

1. Stop the vehicle.
2. Shift the shift lever to N.
3. Set the parking brake. (→P. 193)
4. Press the engine switch.
5. Release the brake pedal and check that the display on the instrument cluster is off.

Not for Reproduction

Changing engine switch modes

Modes can be changed by pressing the engine switch with brake pedal (vehicles with automatic transmission) or clutch pedal (vehicles with manual transmission) released. (The mode changes each time the switch is pressed.)

① Off*

The emergency flashers can be used.

② ACCESSORY mode

Some electrical components such as the audio system can be used.

"ACCESSORY"/"Accessory mode" will be displayed on the multi-information display.

③ IGNITION ON mode

All electrical components can be used.

"IGNITION ON" will be displayed on the multi-information display.

*: If the shift lever is in a position other than P when turning off the engine, the engine switch will be turned to ACCESSORY mode, not to off (vehicles with automatic transmission only).

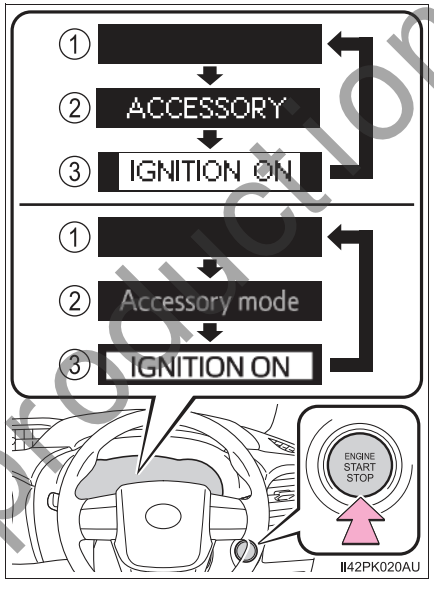

When stopping the engine with the shift lever in a position other than P (vehicles with automatic transmission)

If the engine is stopped with the shift lever in a position other than P, the engine switch will not be turned off but instead be turned to ACCESSORY mode. Perform the following procedure to turn the switch off:

1 Check that the parking brake is set.

2 Shift the shift lever to P.

3 Check that "TURN OFF VEHICLE"/"Turn off vehicle" is displayed on the multi-information display and then press the engine switch once.

Not for Reproduction

4 Check that “TURN OFF VEHICLE”/“Turn off vehicle” on the multi-information display is off.

■ **Note for the electronic key**

Carry the electronic key on your person, for example in your pocket.

The smart entry & start system does not operate properly if the electronic key is on the floor or the instrument panel, or in the door pockets, cup holders or auxiliary boxes.

■ **Auto power off function**

▶ Vehicles with automatic transmission

If the vehicle is left in ACCESSORY mode for more than 20 minutes or IGNITION ON mode (the engine is not running) for more than an hour with the shift lever in P, the engine switch will automatically turn off. However, this function cannot entirely prevent battery discharge. Do not leave the vehicle with the engine switch in ACCESSORY or IGNITION ON mode for long periods of time when the engine is not running.

▶ Vehicles with manual transmission

If the vehicle is left in ACCESSORY mode for more than 20 minutes or IGNITION ON mode (the engine is not running) for more than an hour, the engine switch will automatically turn off. However, this function cannot entirely prevent battery discharge. Do not leave the vehicle with the engine switch in ACCESSORY or IGNITION ON mode for long periods of time when the engine is not running.

■ **Operation of the engine switch**

If the switch is not pressed shortly and firmly, the engine switch mode may not change or the engine may not start.

■ **Electronic key battery depletion**

→P. 121

■ **Conditions affecting operation**

→P. 119

■ **Note for the entry function**

→P. 120

■ **If the engine does not start**

The engine immobilizer system may not have been deactivated. (→P. 71)
Contact your Toyota dealer.

Not for Reproduction

■ **Steering lock**

After turning the engine switch off and opening and closing the doors, the steering wheel will be locked due to the steering lock function. Operating the engine switch again automatically cancels the steering lock.

■ **When the steering lock cannot be released**

A message will be displayed on the multi-information display.

Check that the shift lever is set in P (except manual transmission). Press the engine switch while turning the steering wheel left and right.

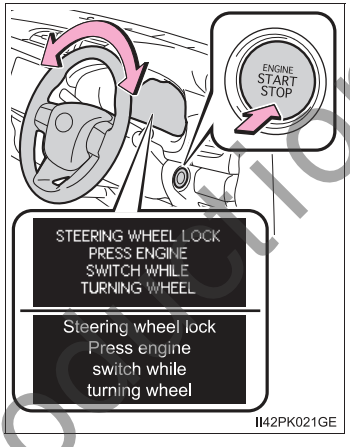

■ **Steering lock motor overheating prevention**

To prevent the steering lock motor from overheating, the motor may be suspended if the engine is turned on and off repeatedly in a short period of time. In this case, refrain from running the engine. After about 10 seconds, the steering lock motor will resume functioning.

■ **If "SMART ENTRY & START SYSTEM MALFUNCTION SEE OWNER'S MANUAL"/"Smart Entry & Start System malfunction See owner's manual" is shown on the multi-information display (if equipped)**

The system may be malfunctioning. Have the vehicle inspected by your Toyota dealer immediately.

■ **If the electronic key battery is depleted**

→P. 425

■ **If the smart entry & start system has been deactivated in a customized setting**

→P. 490

Not for Reproduction

WARNING

■ **When starting the engine**

Always start the engine while sitting in the driver's seat. Do not depress the accelerator pedal while starting the engine under any circumstances.
Doing so may cause an accident resulting in death or serious injury.

■ **Caution while driving**

If engine failure occurs while the vehicle is moving, do not lock or open the doors until the vehicle reaches a safe and complete stop. Activation of the steering lock in this circumstance may lead to an accident, resulting in death or serious injury.

■ **Stopping the engine in an emergency**

- If you want to stop the engine in an emergency while driving the vehicle, press and hold the engine switch for more than 2 seconds, or press it briefly 3 times or more in succession. (→P. 451)
  However, do not touch the engine switch while driving except in an emergency. If the engine switch is pressed while the vehicle is moving, the warning message "PUSH AND HOLD ENGINE SWITCH FOR EMERGENCY STOP"/"Push and hold engine switch for emergency stop" is displayed on the multi-information display and a buzzer sounds. Turning the engine off while driving will not cause loss of steering or braking control, but the power assist to these systems will be lost. This will make it more difficult to steer and brake, so you should pull over and stop the vehicle as soon as it is safe to do so.
- To restart the engine after turning off the engine while driving, shift the shift lever to N (automatic transmission) or depress the clutch pedal (manual transmission) and then press the engine switch.

Not for Reproduction

NOTICE

■ **To prevent battery discharge**

- Do not leave the engine switch in ACCESSORY or IGNITION ON mode for long periods of time without the engine running.
- If “ACCESSORY”/“Accessory mode” or “IGNITION ON” is displayed on the multi-information display while the engine is not running, the engine switch is not off. Exit the vehicle after turning the engine switch off.
- On vehicles with automatic transmission, do not stop the engine when the shift lever is in a position other than P. If the engine is stopped in another shift lever position, the engine switch will not be turned off but instead be turned to ACCESSORY mode. If the vehicle is left in ACCESSORY mode, battery discharge may occur.

■ **When starting the engine**

- Do not race a cold engine.
- If the engine becomes difficult to start or stalls frequently, have your vehicle checked by your Toyota dealer immediately.

■ **Symptoms indicating a malfunction with the engine switch**

If the engine switch seems to be operating somewhat differently than usual, such as the switch sticking slightly, there may be a malfunction. Contact your Toyota dealer immediately.

Not for Reproduction

Automatic transmission*

Select a shift position appropriate for the driving conditions.

Shifting the shift lever

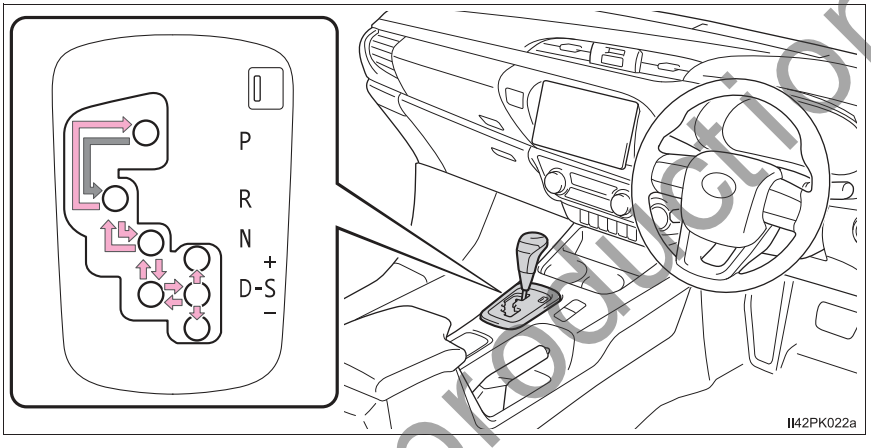

▶ Vehicles without smart entry & start system

← While the engine switch is in the “ON” position, move the shift lever with the brake pedal depressed.

When shifting the shift lever between P and D, make sure that the vehicle is completely stopped.

▶ Vehicles with smart entry & start system

← While the engine switch is in IGNITION ON mode, move the shift lever with the brake pedal depressed.

When shifting the shift lever between P and D, make sure that the vehicle is completely stopped.

Not for Reproduction

*: If equipped

Shift position purpose

Shift position	Function
P	Parking the vehicle/starting the engine
R	Reversing
N	Neutral (Condition in which the power is not transmitted)
D	Normal driving*1
S	S mode driving*2 (→P. 181)

*1: To improve fuel efficiency and reduce noises, set the shift lever in the D position for normal driving.

*2: Selecting shift ranges using S mode restricts the upper limit of the possible gear ranges, controls engine braking force, and prevents unnecessary upshifting.

Not for Reproduction

Selecting the driving mode

The following modes can be selected to suit driving conditions.

■ Eco drive mode

Use Eco drive mode to help achieve low fuel consumption during trips that involve frequent accelerating.

Press the “ECO MODE” switch to select Eco drive mode.

The “ECO MODE” indicator light will come on.

Press the switch again to cancel Eco drive mode.

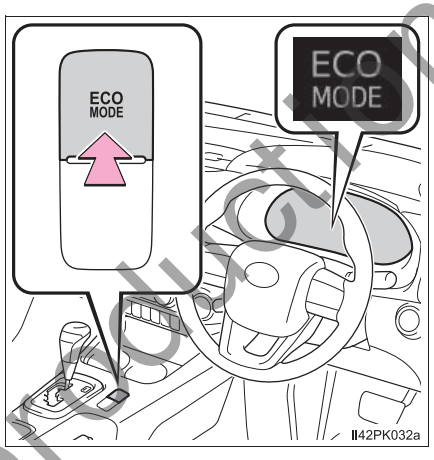

■ Power mode

Use when high levels of response and feeling are desirable, such as when driving in mountainous regions or when overtaking.

Press the “PWR MODE” switch to select power mode.

The “PWR MODE” indicator light will come on.

Press the switch again to cancel power mode.

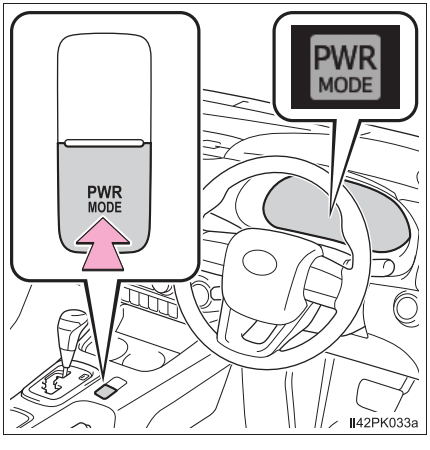

Not for Reproduction

Selecting shift ranges in the S position

To enter S mode, shift the shift lever to S. Shift ranges can be selected by operating the shift lever, allowing you to drive in the shift range of your choosing. The shift range can be selected by the shift lever.

① Upshifting

② Downshifting

The selected shift range, from 1 to 6, will be displayed in the meter.

The initial shift range in S mode is set automatically to 5 or 4 according to vehicle speed. However, the initial shift range may be set to 3 if AI-SHIFT has operated while the shift lever was in D. (→P. 184)

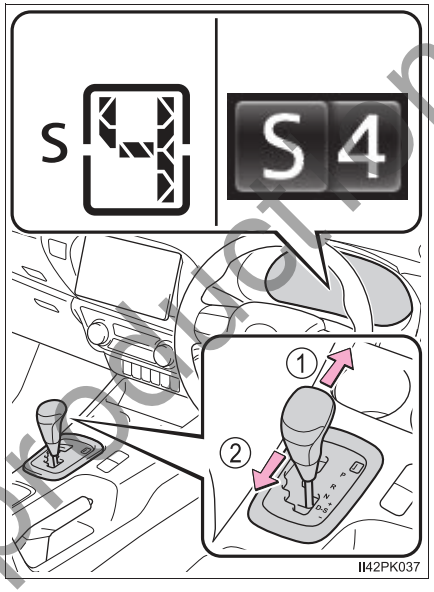

Shift ranges and their functions

- Automatically selecting shift ranges between 1 and 6 according to vehicle speed and driving conditions. But the gear is limited according to selected range.
- You can choose from 6 levels of engine braking force.
- A lower shift range will provide greater engine braking force than a higher shift range, and the engine speed will also increase.

Not for Reproduction

■ **S mode**

When the shift range is 4 or lower, holding the shift lever toward “+” sets the shift range to 6.

■ **Downshifting restrictions warning buzzer**

To help ensure safety and driving performance, downshifting operation may sometimes be restricted. In some circumstances, downshifting may not be possible even when the shift lever is operated. (A buzzer will sound twice.)

■ **Operation of the air conditioning system in Eco drive mode (vehicles with automatic air conditioning system)**

Eco drive mode controls the heating/cooling operations and fan speed of the air conditioning system to enhance fuel efficiency (→P. 370). To improve air conditioning performance, adjust the fan speed or turn off Eco drive mode.

■ **Deactivation of the driving mode**

- Eco drive mode will not be canceled until the “ECO MODE” switch is pressed, even if the engine is turned off after driving in Eco drive mode.
- Power mode will be canceled if the engine is turned off after driving in power mode.

■ **When driving with cruise control activated (if equipped)**

Even when performing the following actions with the intent of enabling engine braking, engine braking will not activate because cruise control will not be canceled.

- While driving in S mode, downshifting to 5 or 4. (→P. 181)
- When switching the driving mode to power mode while driving in D. (→P. 180)

■ **Shift lock system**

The shift lock system is a system to prevent accidental operation of the shift lever in starting.
The shift lever can be shifted from P only when the engine switch is in the “ON” position (vehicles without smart entry & start system) or IGNITION ON mode (vehicles with smart entry & start system) and the brake pedal is being depressed.

Not for Reproduction

■ If the shift lever cannot be shifted from P

First, check whether the brake pedal is being depressed.

If the shift lever cannot be shifted with your foot on the brake pedal, there may be a problem with the shift lock system. Have the vehicle inspected by your Toyota dealer immediately.

The following steps may be used as an emergency measure to ensure that the shift lever can be shifted.

Releasing the shift lock:

1. Set the parking brake.
2. Vehicles without smart entry & start system:
   Turn the engine switch to the “LOCK” position.

   Vehicles with smart entry & start system:
   Turn the engine switch off.
3. Depress the brake pedal.
4. Press the shift lock override button with a flathead screwdriver or equivalent tool.

   The shift lever can be shifted while the button is pressed.

   To prevent damage to the button, cover the tip of the screwdriver with a rag.

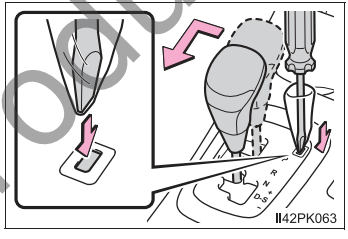

■ If the “S” indicator does not come on or the “D” indicator is displayed even after shifting the shift lever to S

This may indicate a malfunction in the automatic transmission system. Have the vehicle inspected by your Toyota dealer immediately.

■ Transmission protection function

If the tires spin continually when the vehicle becomes stuck in mud, dirt or snow, or if the accelerator pedal is depressed and released repeatedly while driving, the automatic transmission temperature may become too high and the automatic transmission may be damaged.
To avoid damaging the automatic transmission, the system may temporarily lock the gear.
If the automatic transmission temperature falls, the gear locking is canceled and the automatic transmission is returned to the normal operation.

Not for Reproduction

■ If the warning light comes on or the warning message is displayed

▶ Vehicles without the multi-information display

If the automatic transmission fluid temperature warning light comes on while driving, make sure to return to D position driving and reduce speed by easing off the accelerator pedal. Stop the vehicle in a safe place, shift the shift lever to P and let the engine idle until the warning light goes out.

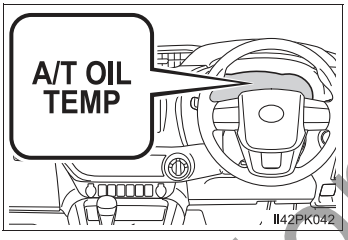

When the warning light goes out, the vehicle can be driven again.

If the warning light does not go out after waiting a while, have your vehicle inspected by your Toyota dealer.

▶ Vehicles with the multi-information display

If the automatic transmission fluid temperature warning message is displayed while driving, make sure to return to D position driving and reduce speed by easing off the accelerator pedal. Stop the vehicle in a safe place, shift the shift lever to P and let the engine idle until the warning message goes out.

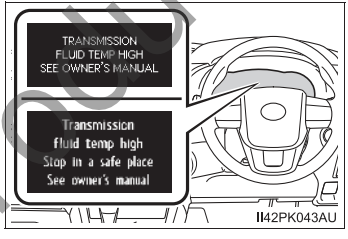

When the warning message goes out, the vehicle can be driven again.

If the warning message does not go out after waiting a while, have your vehicle inspected by your Toyota dealer.

■ AI-SHIFT

The AI-SHIFT automatically selects the suitable gear according to driver performance and driving conditions.
The AI-SHIFT automatically operates when the shift lever is in D. (Shifting the shift lever to S cancels the function.)

Not for Reproduction

WARNING

■ **When driving on slippery road surfaces**

Do not accelerate or shift gears suddenly.
Sudden changes in engine braking may cause the vehicle to spin or skid, resulting in an accident.

■ **To prevent an accident when releasing the shift lock**

Before pressing the shift lock override button, make sure to set the parking brake and depress the brake pedal.
If the accelerator pedal is accidentally depressed instead of the brake pedal when the shift lock override button is pressed and the shift lever is shifted out of P, the vehicle may suddenly start, possibly leading to an accident resulting in death or serious injury.

Not for Reproduction

Manual transmission*

Shifting the shift lever

▶ 5-speed transmission

Fully depress the clutch pedal before operating the shift lever, and then release it slowly.

If it is difficult to shift in reverse, shift the shift lever to N, release the clutch pedal momentarily, and then try again.

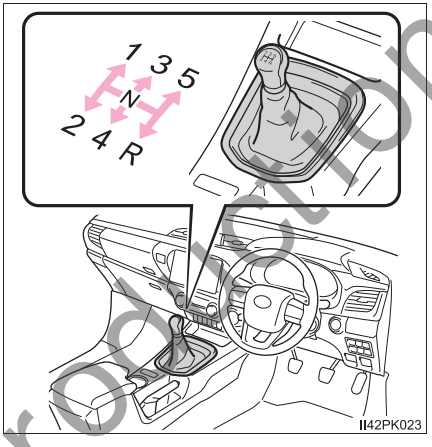

▶ 6-speed transmission

Fully depress the clutch pedal before operating the shift lever, and then release it slowly.

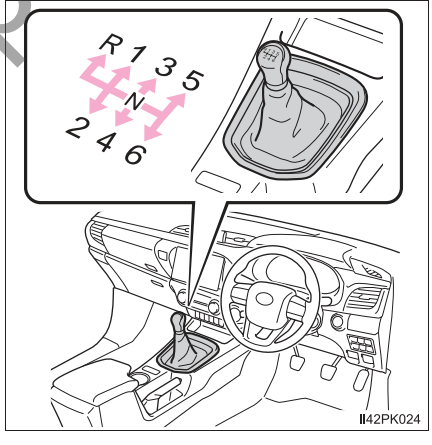

Not for Reproduction

*: If equipped

Selecting the driving mode (if equipped)

The following modes can be selected to suit driving conditions.

■ Eco drive mode

Use Eco drive mode to help achieve low fuel consumption during trips that involve frequent accelerating.

Press the “ECO MODE” switch to select Eco drive mode.

The “ECO MODE” indicator light will come on.

Press the switch again to cancel Eco drive mode.

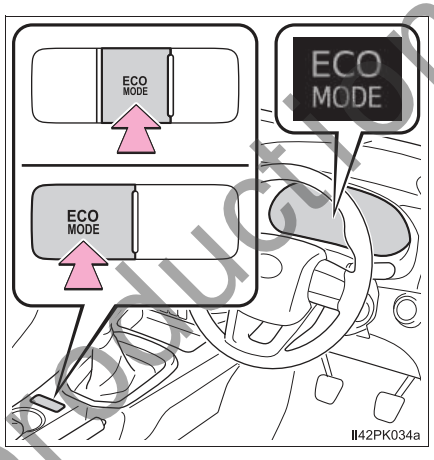

■ Power mode

Use when high levels of response and feeling are desirable, such as when driving in mountainous regions or when overtaking.

Press the “PWR MODE” switch to select power mode.

The “PWR MODE” indicator light will come on.

Press the switch again to cancel power mode.

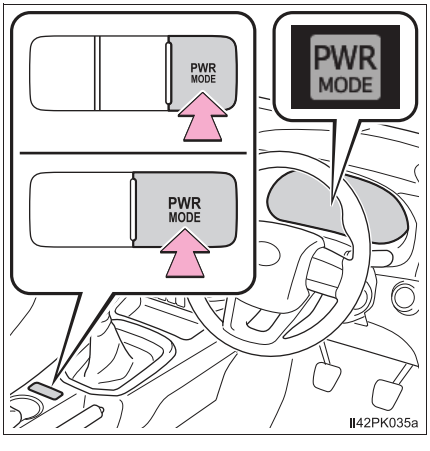

Not for Reproduction

iMT (Intelligent Manual Transmission) (if equipped)

iMT detects clutch pedal and shift lever operations performed by the driver. When the shift position is changed, iMT judges the optimal engine speed and performs the appropriate control to help the driver to change the shift position smoothly.

Press the “iMT” switch.

The “iMT” indicator light will come on.

Press the switch again to cancel iMT.

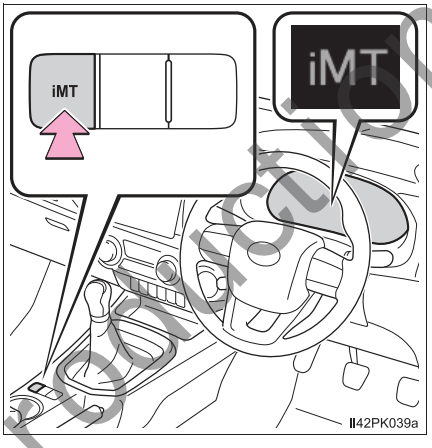

Maximum downshifting speeds

Observe the downshifting speeds in the following table to prevent over-revving the engine.

▶ 5-speed transmission

km/h (mph)

	Maximum speed			
Shift position	1	2	3	4
1GD-FTV and 2GD-FTV engines	36 (22)	66 (41)	107 (66)	153 (95)
2TR-FE engine	39 (24)	72 (44)	117 (72)	167 (103)

Not for Reproduction

▶ 6-speed transmission

4WD models (front-wheel drive control switch in H2 or H4):

km/h (mph)

		Maximum speed				
Shift position		1	2	3	4	5
1GD-FTV engine	225/70R17C tires	35 (21)	69 (42)	116 (72)	167 (103)	175 (108)
	265/60R18 tires	36 (22)	70 (43)	118 (73)	171 (106)	180 (111)
	265/65R17 tires	36 (22)	70 (43)	118 (73)	170 (105)	180 (111)
2GD-FTV engine	225/70R17C tires	35 (21)	69 (42)	116 (72)	167 (103)	170 (108)
	265/65R17 tires	36 (22)	70 (43)	118 (73)	170 (105)	170 (108)

4WD models (front-wheel drive control switch in L4):

km/h (mph)

		Maximum speed				
Shift position		1	2	3	4	5
1GD-FTV engine	225/70R17C tires	14 (8)	27 (16)	45 (27)	65 (40)	79 (49)
	265/60R18 tires	14 (8)	28 (17)	46 (28)	67 (41)	81 (50)
	265/65R17 tires	14 (8)	27 (16)	46 (28)	67 (41)	81 (50)
2GD-FTV engine	225/70R17C tires	14 (8)	27 (16)	45 (27)	65 (40)	84 (52)
	265/65R17 tires	14 (8)	27 (16)	46 (28)	67 (41)	86 (53)

Pre Runner:

km/h (mph)

	Maximum speed				
Shift position	1	2	3	4	5
265/60R18 tires	36 (22)	70 (43)	118 (73)	171 (106)	180 (111)
265/65R17 tires	36 (22)	70 (43)	118 (73)	170 (105)	180 (111)

Not for Reproduction

■ **Operation of the air conditioning system in Eco drive mode (vehicles with automatic air conditioning system)**

Eco drive mode controls the heating/cooling operations and fan speed of the air conditioning system to enhance fuel efficiency (→P. 370). To improve air conditioning performance, adjust the fan speed or turn off Eco drive mode.

■ **Deactivation of the driving mode (if equipped)**

- Eco drive mode will not be canceled until the “ECO MODE” button is pressed, even if the engine is turned off after driving in Eco drive mode.
- Power mode will be canceled if the engine is turned off after driving in power mode.

■ **Reverse warning buzzer (6-speed transmission)**

A buzzer will sound to alert the driver if the shift lever is shifted to the R position.

■ **Operation of iMT**

- When the clutch pedal is depressed and the shift lever is moved to a position, iMT controls the engine speed to be optimal for changing the shift position. However, iMT stops operating before the shift position is changed if the clutch pedal is not released for a while, and the engine speed cannot be controlled. To operate iMT again, depress the clutch pedal and operate the shift lever.
- The engine speed may be increased when the clutch pedal is depressed, however, this does not indicate a malfunction.

■ **When iMT does not operate**

In the following situations, iMT may not operate. However, this does not indicate a malfunction.

- The shift lever is not operated for a long time after the clutch pedal is depressed.
- The vehicle moves for a while after the shift lever is shifted to N and the clutch pedal is released, and then the clutch pedal is depressed and the shift lever is moved to a position.
- The clutch pedal is not completely released and depressed again.
- The clutch pedal is not fully depressed.

■ **If the warning message for iMT is shown on the multi-information display**

iMT may be malfunctioning and the function is disabled. Have the vehicle inspected at your Toyota dealer.

Not for Reproduction

WARNING

Limitations of the iMT

iMT is not a system that prevents shift lever operation error or engine over-revving. Depending on the situation, iMT may not operate normally and the shift position may not be changed smoothly. Overly relying on iMT may cause an unexpected accident.

Not for Reproduction

Turn signal lever

Operating instructions

① Left turn

② Right turn

③ Lane change to the left (move the lever partway and release it)

The left hand signals will flash 3 times.

④ Lane change to the right (move the lever partway and release it)

The right hand signals will flash 3 times.

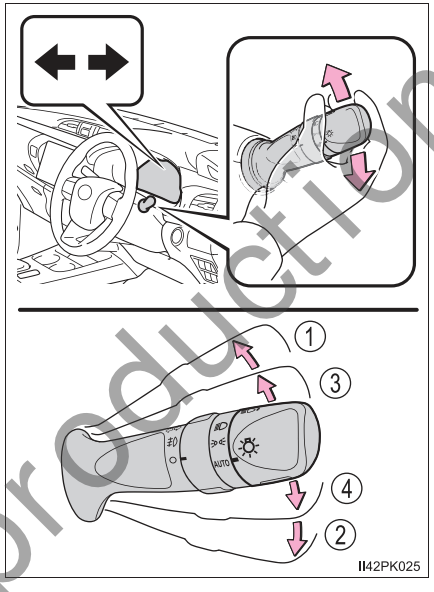

■ **Turn signals can be operated when**

▶ Vehicles without smart entry & start system

The engine switch is in the “ON” position.

▶ Vehicles with smart entry & start system

The engine switch is in IGNITION ON mode.

■ **If the indicator flashes faster than usual**

Check that a light bulb in the front or rear turn signal lights has not burned out.

■ **If the turn signals stop flashing before a lane change has been performed**

Operate the lever again.

■ **To discontinue flashing of the turn signals during a lane change**

Operate the lever in the opposite direction.

■ **Customization**

The number of times the turn signals flash during a lane change can be changed.

(Customizable features: →P. 529)

Not for Reproduction

Parking brake

① Sets the parking brake

Fully pull the parking brake while depressing the brake pedal.
At this time, the parking brake indicator light will come on.

② Releases the parking brake

Slightly raise the lever and lower it completely while pressing the button.
At this time, the parking brake indicator light will go off.

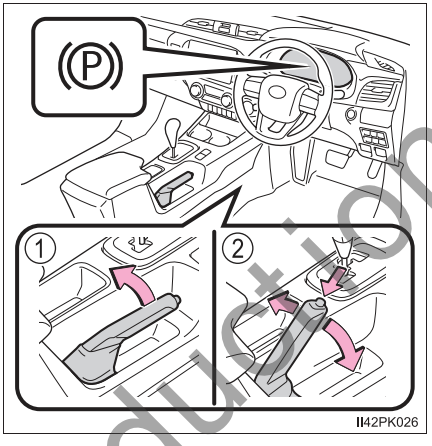

■ **Parking the vehicle**

→P. 145

■ **Parking brake engaged warning buzzer**

→P. 465

■ **Usage in winter time**

→P. 250

NOTICE

■ **Before driving**

Fully release the parking brake.
Driving the vehicle with the parking brake set will lead to brake components overheating, which may affect braking performance and increase brake wear.

Not for Reproduction

Headlight switch

The headlights can be operated manually or automatically.

Operating instructions

Turning the end of the lever turns on the lights as follows:

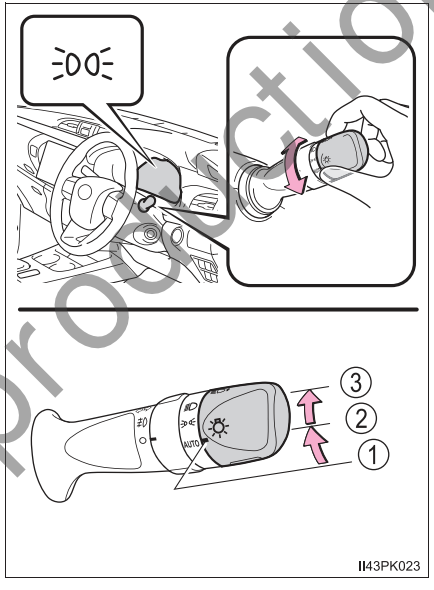

① **AUTO** The headlights, front position, tail, license plate, instrument panel and daytime running lights (→P. 196) turn on and off automatically (when the engine switch is in the “ON” position [vehicles without smart entry & start system] or IGNITION ON mode [vehicles with smart entry & start system]).

② The front position, tail, license plate and instrument panel lights turn on.

③ The headlights and all lights listed above turn on.

Not for Reproduction

Turning on the high beam headlights

① With the headlights on, push the lever away from you to turn on the high beams.

Pull the lever toward you to the center position to turn the high beams off.

② Pull the lever toward you and release it to flash the high beams once.

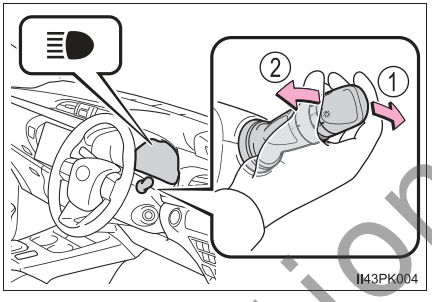

You can flash the high beams with the headlights on or off.

Manual headlight leveling dial (if equipped)

The level of the headlights can be adjusted according to the number of passengers and the loading condition of the vehicle.

① Raises the level of the headlights

② Lowers the level of the headlights

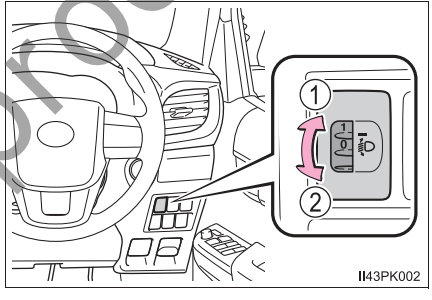

■ Guide to dial settings

Occupancy and luggage load conditions		Dial position	
Occupants	Luggage load	Single-cab and smart-cab models	Double-cab models
Driver	None	0	0
Driver	Full luggage loading	2.5	3

Not for Reproduction

Follow me home system

This system allows the headlights and front position lights to be turned on for 30 seconds when the engine switch is turned to the “LOCK” position (vehicles without smart entry & start system) or off (vehicles with smart entry & start system).

Pull the lever toward you and release it with the light switch is in AUTO after turning the engine switch to the “LOCK” position (vehicles without smart entry & start system) or off (vehicles with smart entry & start system).

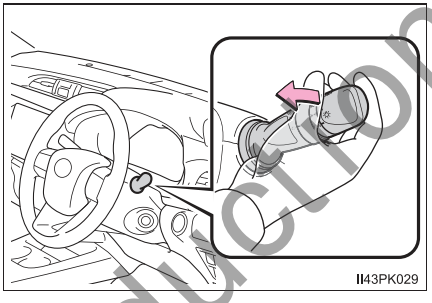

Pull the lever toward you and release it again to turn off the lights.

Daytime running light system

To make your vehicle more visible to other drivers during daytime driving, the daytime running lights turn on automatically whenever the engine is started with the headlight switch AUTO. (Illuminate brighter than the front position lights.) The daytime running light system is not designed for use at night.

Headlight control sensor

The sensor may not function properly if an object is placed on the sensor, or anything that blocks the sensor is affixed to the windshield.

Doing so interferes with the sensor detecting the level of ambient light and may cause the automatic headlight system to malfunction.

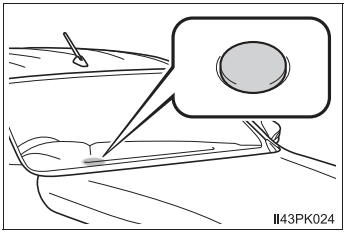

Not for Reproduction

■ **Automatic light off system**

The lights turn off after the engine switch is turned to the “LOCK” position (vehicles without smart entry & start system) or off (vehicles with smart entry & start system) and the driver’s door is opened.

To turn the lights on again, turn the engine switch to the “ON” position (vehicles without smart entry & start system) or to IGNITION ON mode (vehicles with smart entry & start system), or turn the light switch to AUTO once and then back to ≣D⇐ or ≣D.

■ **Light reminder buzzer (if equipped)**

▶ Vehicles without smart entry & start system

A buzzer sounds when the engine switch is turned to the “LOCK” position, the key is removed and the driver’s door is opened while the lights are turned on.

▶ Vehicles with smart entry & start system

A buzzer sounds when the engine switch is turned off and the driver’s door is opened while the lights are turned on.

■ **Battery-saving function**

In order to prevent the battery of the vehicle from discharging, if the headlights and/or tail lights are on when the engine switch is turned to the “LOCK” position (vehicles without smart entry & start system) or off (vehicles with smart entry & start system), the battery-saving function will operate and automatically turn off all the lights after approximately 20 minutes.

When any of the following are performed, the battery-saving function is canceled once and then reactivated. All the lights will turn off automatically 20 minutes after the battery-saving function has been reactivated:

- When the headlight switch is operated
- When a door is closed once and then opened

■ **Automatic headlight leveling system (if equipped)**

The level of the headlights is automatically adjusted according to the number of passengers and the loading condition of the vehicle to ensure that the headlights do not interfere with other road users.

■ **Customization**

Settings (e.g. light sensor sensitivity) can be changed.
(Customizable features: →P. 529)

⚠ NOTICE

■ **To prevent battery discharge**

Do not leave the lights on longer than necessary when the engine is not running.

Not for Reproduction

Fog light switch*

The fog lights secure excellent visibility in difficult driving conditions, such as in rain and fog.

① ○ Turns the fog lights off

② Turns the fog lights on

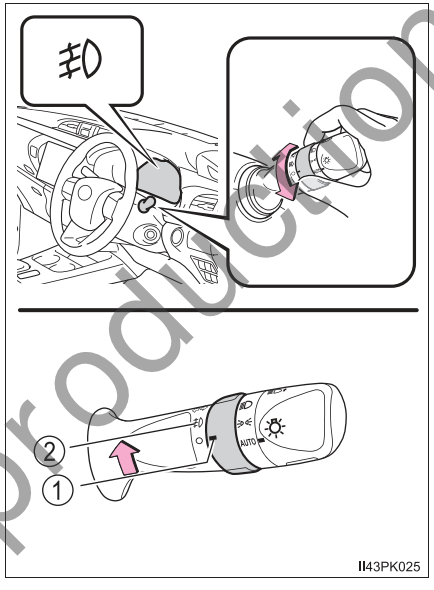

■ **Fog lights can be used when**

The headlights or front position lights are turned on.

Not for Reproduction

*: If equipped

Windshield wipers and washer

Operating the wiper lever

The wiper operation is selected by moving the lever as follows.

① Intermittent operation
② Low speed operation
③ High speed operation
④ Temporary operation

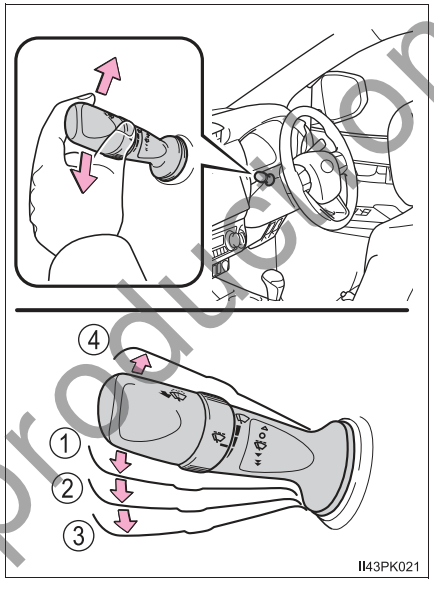

If equipped, wiper intervals can be adjusted when intermittent operation is selected.

⑤ Increases the intermittent windshield wiper frequency
⑥ Decreases the intermittent windshield wiper frequency

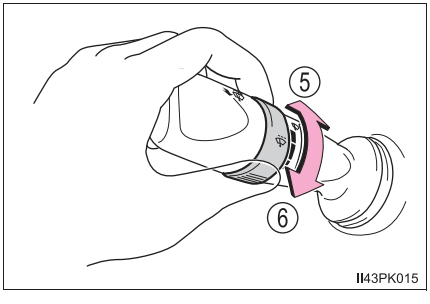

Not for Reproduction

⑦ Washer/wiper dual operation

The wipers will automatically operate a couple of times after the washer squirts.

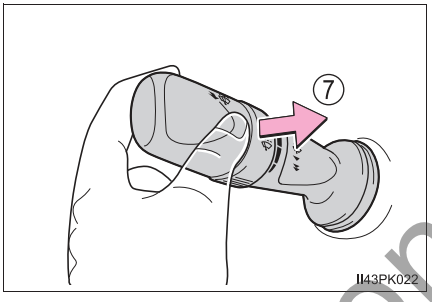

■ **The windshield wipers and washer can be operated when**

The engine switch is in the “ON” position (vehicles without smart entry & start system) or IGNITION ON mode (vehicles with smart entry & start system).

■ **If no windshield washer fluid sprays**

Check that the washer nozzles are not blocked if there is washer fluid in the windshield washer fluid reservoir.

WARNING

■ **Caution regarding the use of washer fluid**

When it is cold, do not use the washer fluid until the windshield becomes warm. The fluid may freeze on the windshield and cause low visibility. This may lead to an accident, resulting in death or serious injury.

NOTICE

■ **When the windshield is dry**

Do not use the wipers, as they may damage the windshield.

■ **When the washer fluid tank is empty**

Do not operate the switch continually as the washer fluid pump may overheat.

■ **When a nozzle becomes blocked**

In this case, contact your Toyota dealer.
Do not try to clear it with a pin or other object. The nozzle will be damaged.

Not for Reproduction

Opening the fuel tank cap

Perform the following steps to open the fuel tank cap:

Before refueling the vehicle

- Vehicles without smart entry & start system
  Turn the engine switch to the “LOCK” position and ensure that all the doors and windows are closed.
- Vehicles with smart entry & start system
  Turn the engine switch off and ensure that all the doors and windows are closed.
- Confirm the type of fuel.

■ **Fuel types**
→P. 527

■ **Fuel tank opening for unleaded gasoline (gasoline engine)**
To help prevent incorrect fueling, your vehicle has a fuel tank opening that only accommodates the special nozzle on unleaded fuel pumps.

Not for Reproduction

WARNING

■ **When refueling the vehicle**

Observe the following precautions while refueling the vehicle. Failure to do so may result in death or serious injury.

- After exiting the vehicle and before opening the fuel cap, touch an unpainted metal surface to discharge any static electricity. It is important to discharge static electricity before refueling because sparks resulting from static electricity can cause fuel vapors to ignite while refueling.
- Type A (→P. 203) only: Always hold the grips on the fuel tank cap and turn it slowly to remove it.
  A whooshing sound may be heard when the fuel tank cap is loosened. Wait until the sound cannot be heard before fully removing the cap. In hot weather, pressurized fuel may spray out the filler neck and cause injury.
- Do not allow anyone that has not discharged static electricity from their body to come close to an open fuel tank.
- Do not inhale vaporized fuel.
  Fuel contains substances that are harmful if inhaled.
- Do not smoke while refueling the vehicle.
  Doing so may cause the fuel to ignite and cause a fire.
- Do not return to the vehicle or touch any person or object that is statically charged.
  This may cause static electricity to build up, resulting in a possible ignition hazard.

■ **When refueling**

Observe the following precautions to prevent fuel overflowing from the fuel tank:

- Securely insert the fuel nozzle into the fuel filler neck.
- Stop filling the tank after the fuel nozzle automatically clicks off.
- Do not top off the fuel tank.

Not for Reproduction

NOTICE

■ **Refueling**

- Do not spill fuel during refueling.
  Doing so may damage the vehicle, such as causing the emission control system to operate abnormally or damaging fuel system components or the vehicle's painted surface.
- Vehicles with DPF system:
  Use the specified fuel. If fuel other than the specified fuel is used, white smoke may be continuously emitted from the exhaust pipe during regenerating the filter. (→P. 244)

Opening the fuel tank cap

■ Type A

1 Pull up the opener to open the fuel filler door.

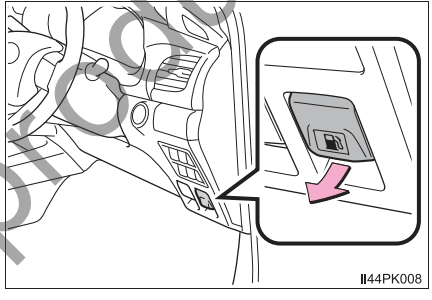

2 Turn the fuel tank cap slowly to remove it and hang it on the back of the fuel filler door.

▶ Without over fender

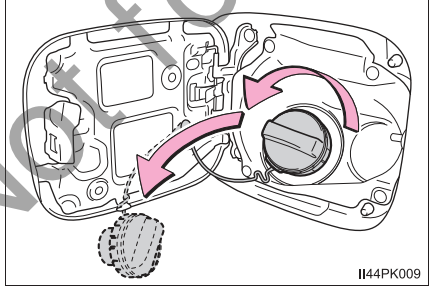

▶ With over fender

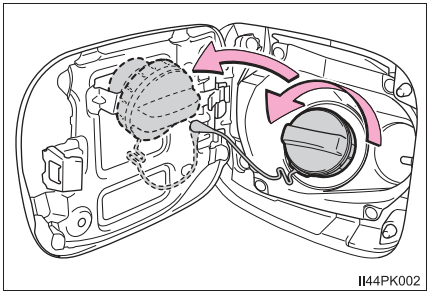

Not for Reproduction

■ Type B

1 To unlock the fuel tank cap, insert the key and turn it counterclockwise.

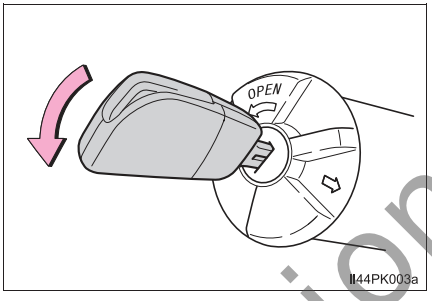

2 Turn the fuel tank cap slowly to open.

Make sure not to hold and turn the key.

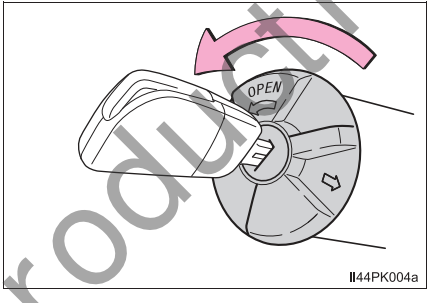

Not for Reproduction

Closing the fuel tank cap

■ Type A

After refueling, turn the fuel tank cap until you hear a click. Once the cap is released, it will turn slightly in the opposite direction.

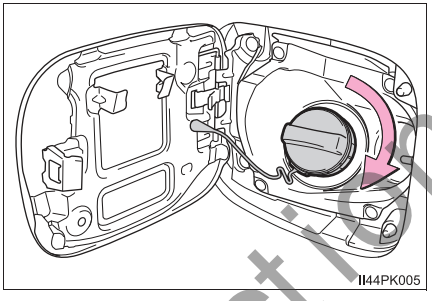

■ Type B

1 Close the fuel tank cap

Make sure to put the fuel tank cap with the arrow upward and turn it slowly to close.

When turning the fuel tank cap, do not hold and turn the key.

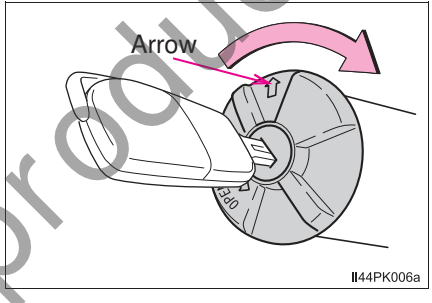

2 Lock the fuel cap

Turning the fuel cap key clockwise.

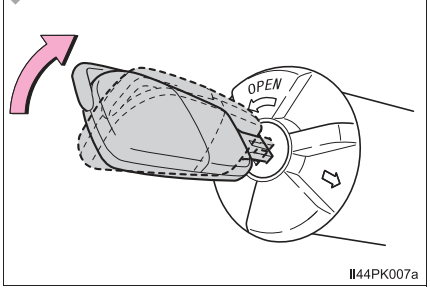

⚠ WARNING

■ When replacing the fuel tank cap

Do not use anything but a genuine Toyota fuel tank cap designed for your vehicle. Doing so may cause a fire or other incident which may result in death or serious injury.

Not for Reproduction

Cruise control*

Summary of functions

Use the cruise control to maintain a set speed without depressing the accelerator pedal.

① Indicators

② Cruise control switch

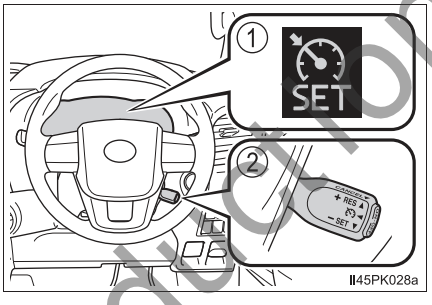

Setting the vehicle speed

1 Press the “ON-OFF” button to activate the cruise control.

Cruise control indicator will come on.

Press the button again to deactivate the cruise control.

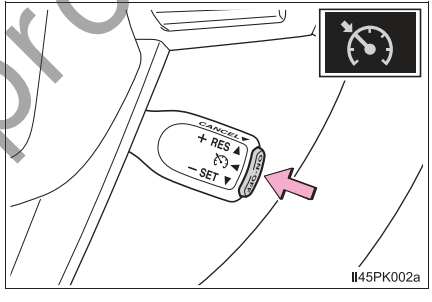

2 Accelerate or decelerate the vehicle to the desired speed, and push the lever down to set the speed.

“SET” indicator will come on.

The vehicle speed at the moment the lever is released becomes the set speed.

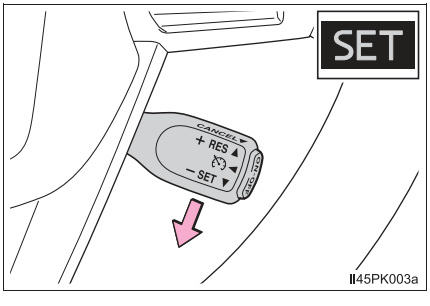

Not for Reproduction

*: If equipped

Adjusting the set speed

To change the set speed, operate the lever until the desired set speed is obtained.

① Increases the speed

② Decreases the speed

Fine adjustment: Momentarily move the lever in the desired direction.

Large adjustment: Hold the lever in the desired direction.

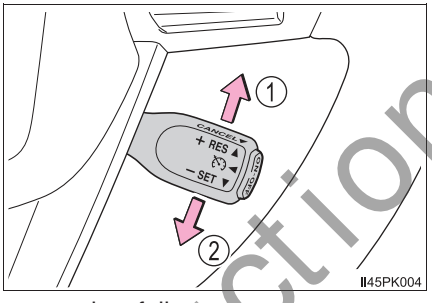

The set speed will be increased or decreased as follows:

Fine adjustment: By approximately 1.6 km/h (1 mph) each time the lever is operated.

Large adjustment: The set speed can be increased or decreased continually until the lever is released.

Canceling and resuming the constant speed control

① Pulling the lever toward you cancels the constant speed control.

The speed setting is also canceled when the brakes are applied or the clutch pedal (manual transmission only) is depressed.

② Pushing the lever up resumes the constant speed control.

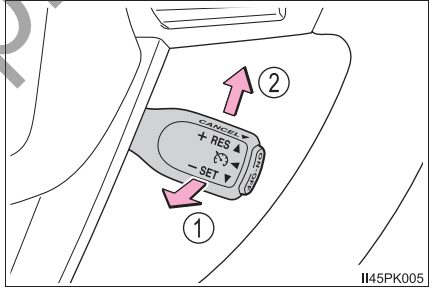

Resuming is available when the vehicle speed is more than approximately 40 km/h (25 mph).

Not for Reproduction

■ **Cruise control can be set when**

- The shift lever is in the D or range 4 or higher of S has been selected. (vehicles with automatic transmission)
- The clutch pedal is not depressed. (vehicles with manual transmission)
- Vehicle speed is above approximately 40 km/h (25 mph).

■ **Accelerating after setting the vehicle speed**

- The vehicle can be accelerated normally. After acceleration, the set speed resumes.
- Even without canceling the cruise control, the set speed can be increased by first accelerating the vehicle to the desired speed and then pushing the lever down to set the new speed.

■ **Automatic cruise control cancelation**

Cruise control will stop maintaining the vehicle speed in any of the following situations:

- Actual vehicle speed falls more than approximately 16 km/h (10 mph) below the preset vehicle speed.
  At this time, the memorized set speed is not retained.
- Actual vehicle speed is below approximately 40 km/h (25 mph).
- VSC is activated.
- 4WD models: The front-wheel drive control switch is switched between H2 and H4.
- TRC or A-TRC is activated for a period of time.
- When the VSC, TRC or A-TRC system is turned off.

■ **If the warning message for the cruise control is shown on the multi-information display or the cruise control indicator light turns to yellow**

Press the “ON-OFF” button once to deactivate the system, and then press the button again to reactivate the system.
If the cruise control speed cannot be set or if the cruise control cancels immediately after being activated, there may be a malfunction in the cruise control system. Have the vehicle inspected by your Toyota dealer.

Not for Reproduction

WARNING

■ **To avoid operating the cruise control by mistake**

Switch the cruise control off using the “ON-OFF” button when not in use.

■ **Situations unsuitable for cruise control**

Do not use cruise control in any of the following situations.
Doing so may result in loss of control and could cause an accident resulting in death or serious injury.

- In heavy traffic
- On roads with sharp bends
- On winding roads
- On slippery roads, such as those covered with rain, ice or snow
- On steep hills
  Vehicle speed may exceed the set speed when driving down a steep hill.
- When your vehicle is towing a trailer or during emergency towing

Not for Reproduction

Rear view monitor system*

The rear view monitor system assists the driver by displaying an image of the view behind the vehicle with fixed guide lines while backing up, for example while parking.

The screen illustrations used in this text are intended as examples, and may differ from the image that is actually displayed on the screen.

The rear view monitor system will activate when the shift lever is in R. (→P. 178, 186)

The rear view monitor system will be deactivated when the shift lever is in any position other than R.

When the shift lever is shifted to the R position and any mode button (such as “SETUP”/“APPS”) is pressed, the rear view monitor system is canceled, and the screen is switched to the mode of the button that was pressed.

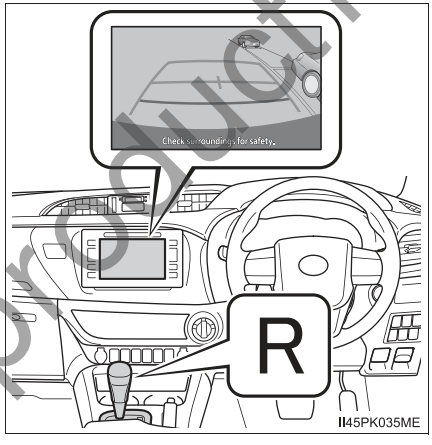

Not for Reproduction

*: If equipped

Using the rear view monitor system

■ Screen description

▶ Vehicles without smart entry & start system

The rear view monitor system screen will be displayed if the shift lever is shifted to R while the engine switch is in the “ON” position.

▶ Vehicles with smart entry & start system

The rear view monitor system screen will be displayed if the shift lever is shifted to R while the engine switch is in IGNITION ON mode.

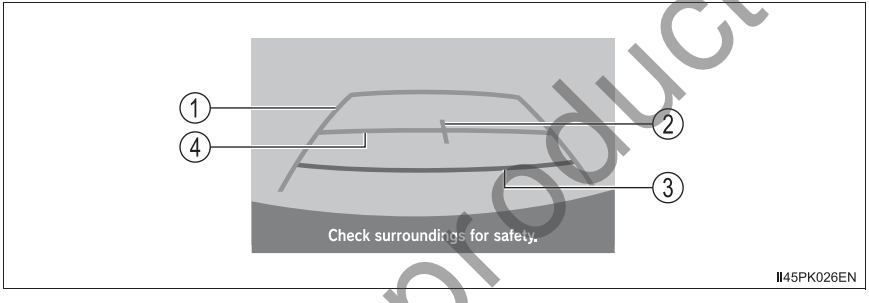

① Vehicle width guide line

The line indicates a guide path when the vehicle is being backed straight up.
The displayed width is wider than the actual vehicle width.

② Vehicle center guide line

These lines indicate the estimated vehicle center on the ground.

③ Distance guide line (red)

The line shows distance behind the vehicle, a point approximately 0.5 m (1.5 ft.) from the edge of the bumper.

④ Distance guide line (blue)

The line shows distance behind the vehicle, a point approximately 1 m (3 ft.) from the edge of the bumper.

Not for Reproduction

Rear view monitor system precautions

■ Area displayed on screen

The rear view monitor system displays an image of the view from the bumper of the rear area of the vehicle.

The image on the rear view monitor system screen can be adjusted: →P. 274

For vehicles with navigation system or multimedia system, refer to the “Navigation and Multimedia System Owner’ Manual”.

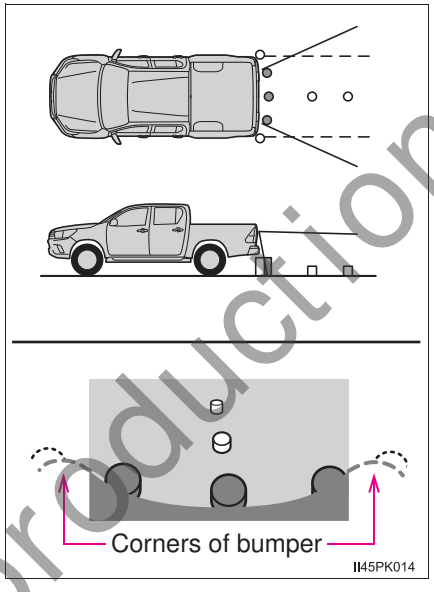

- The area displayed on the screen may vary according to vehicle orientation conditions.
- Objects which are close to either corner of the bumper or under the bumper cannot be displayed.
- The camera uses a special lens. The distance of the image that appears on the screen differs from the actual distance.
- Items which are located higher than the camera may not be displayed on the monitor.

Not for Reproduction

■ Rear view monitor system camera

The camera for the rear view monitor system is located on the tailgate.

▶ Type A

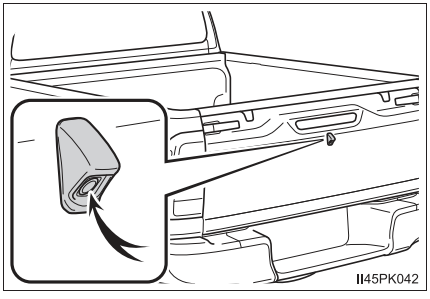

▶ Type B

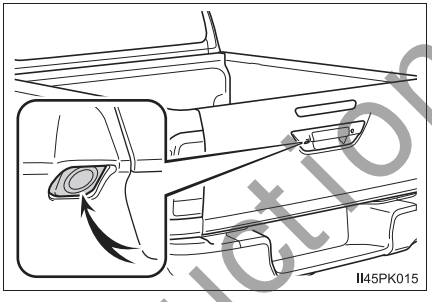

● Using the camera

If dirt or foreign matter (such as water droplets, snow, mud etc.) is adhering to the camera, it cannot transmit a clear image. In this case, flush it with a large quantity of water and wipe the camera lens clean with a soft and wet cloth.

■ Differences between the screen and the actual road

The distance guide lines and the vehicle width guide line may not actually be parallel with the dividing lines of the parking space, even when they appear to be so. Be sure to check visually.

The distances between the vehicle width guide line and the left and right dividing lines of the parking space may not be equal, even when they appear to be so. Be sure to check visually.

The distance guide lines give a distance guide for flat road surfaces. In any of the following situations, there is a margin of error between the fixed guide lines on the screen and the actual distance/course on the road.

Not for Reproduction

● When the ground behind the vehicle slopes up sharply

The distance guide lines will appear to be closer to the vehicle than the actual distance. Because of this, objects will appear to be further away than they actually are. In the same way, there will be a margin of error between the guide lines and the actual distance/course on the road.

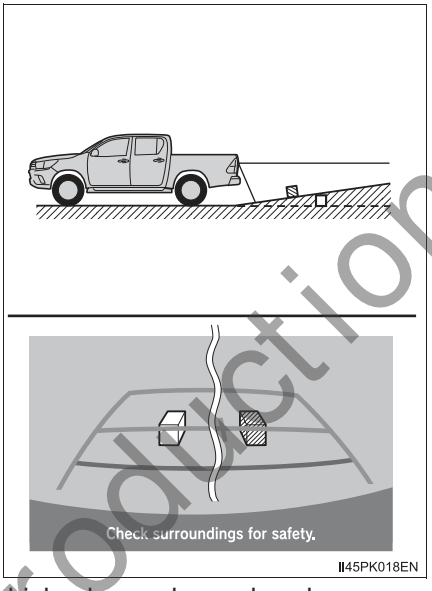

● When the ground behind the vehicle slopes down sharply

The distance guide lines will appear to be further from the vehicle than the actual distance. Because of this, objects will appear to be closer than they actually are. In the same way, there will be a margin of error between the guide lines and the actual distance/course on the road.

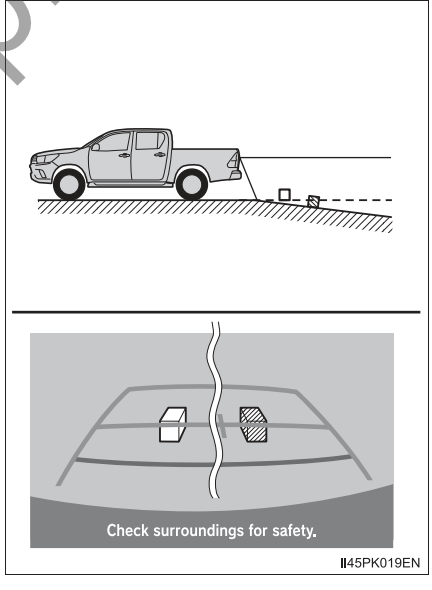

Not for Reproduction

● When any part of the vehicle sags

When any part of the vehicle sags due to the number of passengers or the distribution of the load, there is a margin of error between the fixed guide lines on the screen and the actual distance/course on the road.

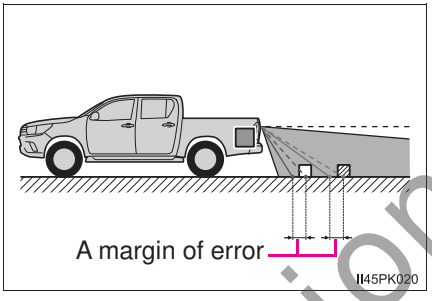

■ When approaching three-dimensional objects

The distance guide lines are displayed according to flat surfaced objects (such as the road). It is not possible to determine the position of three-dimensional objects (such as vehicles) using the vehicle width guide line and distance guide lines. When approaching a three-dimensional object that extends outward (such as the flatbed of a truck), be careful of the following.

● Vehicle width guide line

Visually check the surroundings and the area behind the vehicle. In the case shown in the illustration, the truck appears to be outside of the vehicle width guide line and the vehicle does not look as if it hits the truck. However, the rear body of the truck may actually cross over the vehicle width guide line. In reality if you back up as guided by the vehicle width guide line, the vehicle may hit the truck.

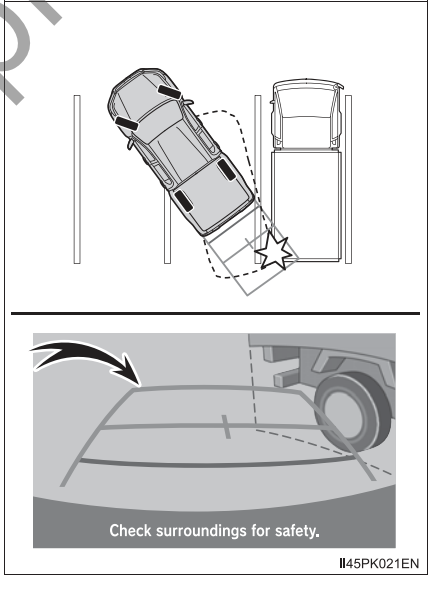

Not for Reproduction

● Distance guide lines

Visually check the surroundings and the area behind the vehicle. On the screen, it appears that a truck is parking at point ②. However, in reality if you back up to point ①, you will hit the truck. On the screen, it appears that ① is closest and ③ is farthest away. However, in reality, the distance to ① and ③ is the same, and ② is further than ① and ③.

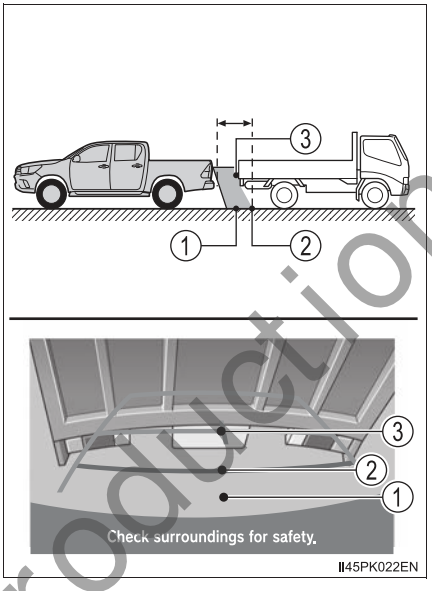

Not for Reproduction

Things you should know

■ If you notice any symptoms

If you notice any of the following symptoms, refer to the likely cause and the solution, and re-check.

If the symptom is not resolved by the solution, have the vehicle inspected by your Toyota dealer.

Likely cause	Solution
❑ The image is difficult to see	
• The vehicle is in a dark area • The temperature around the lens is either high or low • The outside temperature is low • There are water droplets on the camera • It is raining or humid • Foreign matter (mud etc.) is adhering to the camera • There are scratches on the camera • Sunlight or headlights are shining directly into the camera • The vehicle is under fluorescent lights, sodium lights, mercury lights etc.	If this happens due to these causes, it does not indicate a malfunction. Back up while visually checking the vehicle's surroundings. (Use the monitor again once conditions have been improved.) The image on the rear view monitor system screen can be adjusted: →P. 274 For vehicles with navigation system or multimedia system, refer to the "Navigation and Multimedia System Owner' Manual".
❑ The image is blurry	
Dirt or foreign matter (such as water droplets, snow, mud etc.) is adhering to the camera.	Flush the camera with a large quantity of water. After that, rinse the camera lens with water and wipe it clean with a soft and wet cloth.

Not for Reproduction

Likely cause	Solution
❑ The image is out of alignment	
The camera or surrounding area has received a strong impact.	Have the vehicle inspected by your Toyota dealer.
❑ The fixed guide lines are very far out of alignment	
The camera position is out of alignment.	Have the vehicle inspected by your Toyota dealer.
• The vehicle is tilted (there is a heavy load on the vehicle, tire pressure is low due to a tire puncture, etc.) • The vehicle is used on an incline.	If this happens due to these causes, it does not indicate a malfunction. Back up while visually checking the vehicle's surroundings.

WARNING

■ When using the rear view monitor system

The rear view monitor system is a supplemental device intended to assist the driver when backing up. When backing up, be sure to visually check all around the vehicle both directly and using the mirrors before proceeding.

Observe the following precautions to avoid an accident that could result in death or serious injuries.

- Never depend on the rear view monitor system entirely when backing up. The image and the position of the guide lines displayed on the screen may differ from the actual state.
  Use caution, just as you would when backing up any vehicle.
- Be sure to back up slowly, depressing the brake pedal to control vehicle speed.
- The instructions given are only guide lines.
  When and how much to turn the steering wheel will vary according to traffic conditions, road surface conditions, vehicle condition, etc. when parking. It is necessary to be fully aware of this before using the rear view monitor system.
- When parking, be sure to check that the parking space will accommodate your vehicle before maneuvering into it.
- Do not use the rear view monitor system in the following cases:
  - On icy or slick road surfaces, or in snow
  - When using tire chains
  - When the tailgate is not closed completely
  - On roads that are not flat or straight, such as curves or slopes.

Not for Reproduction

WARNING

- In low temperatures, the screen may darken or the image may become faint. The image could distort when the vehicle is moving, or you may become unable to see the image on the screen. Be sure to visually check all around the vehicle both directly and using the mirrors before proceeding.
- If the tire sizes are changed, the position of the fixed guide lines displayed on the screen may change.
- The camera uses a special lens. The distances between objects and pedestrians that appear in the image displayed on the screen will differ from the actual distances.

NOTICE

How to use the camera

- The rear view monitor system may not operate properly in the following cases.
  - If the back of the vehicle is hit, the position and mounting angle of the camera may change.
  - As the camera has a water proof construction, do not detach, disassemble or modify it. This may cause incorrect operation.
  - When cleaning the camera lens, flush the camera with a large quantity of water, rinse the camera lens with water and wipe it with a soft and wet cloth. Failure to do so may cause the camera lens to be scratched and unable to transmit a clear image.
  - Do not allow organic solvent, car wax, window cleaner or glass coat to adhere to the camera. If this happens, wipe it off as soon as possible.
  - If the temperature changes rapidly, such as when hot water is poured on the vehicle in cold weather, the system may not operate normally.
  - When washing the vehicle, do not apply intensive bursts of water to the camera or camera area. Doing so may result in the camera malfunctioning.
  - When the camera is used under fluorescent lights, sodium light or mercury light etc., the lights and the illuminated areas may appear to flicker.
- Do not expose the camera to strong impact as this could cause a malfunction. If this happens, have the vehicle inspected by your Toyota dealer as soon as possible.

Not for Reproduction

Four-wheel drive system*

Use the front-wheel drive control switch to select the following transfer modes.

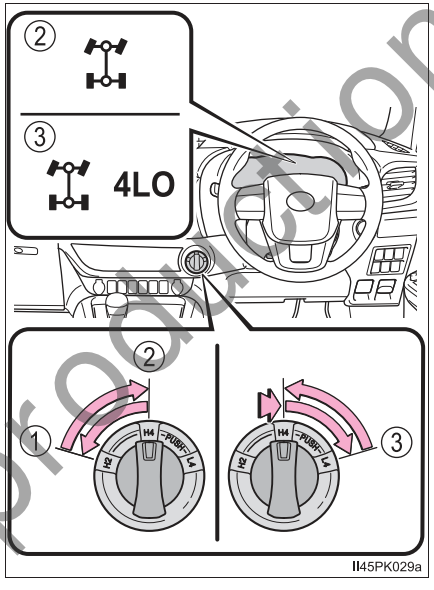

① H2 (high speed position, two-wheel drive)

Use this for normal driving on dry hard-surfaced roads. This position gives greater economy, quietest ride and least wear.

② H4 (high speed position, four-wheel drive)

Use this for driving only on tracks that permit the tires slide, like off-road, icy or snow-covered roads. This position provides greater traction than two-wheel drive.

The four-wheel drive indicator light comes on

③ L4 (low speed position, four-wheel drive)

Use this for maximum power and traction. Use L4 for climbing or descending steep hills, off-road driving, and hard pulling in sand, mud or deep snow.

The four-wheel drive and low speed four-wheel drive indicator lights come on

A.D.D. (automatic disconnecting differential)

The A.D.D. can be engaged or disengaged by the shifting operations described in the following shifting procedures.

Not for Reproduction

*: If equipped

Shifting between H2 and H4

■ Shifting from H2 to H4

1 Reduce the vehicle speed to less than 100 km/h (62 mph).

The transfer mode cannot be switched if the vehicle speed is more than 100 km/h (62 mph).

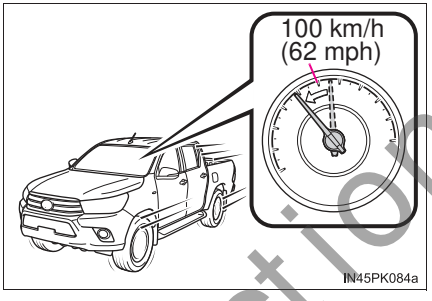

2 Turn the front-wheel drive control switch to H4.

The four-wheel drive indicator light flashes while switching.

If turning the front-wheel drive control switch when the vehicle speed is more than 100 km/h (62 mph), the four-wheel drive indicator light flashes and a buzzer sounds.

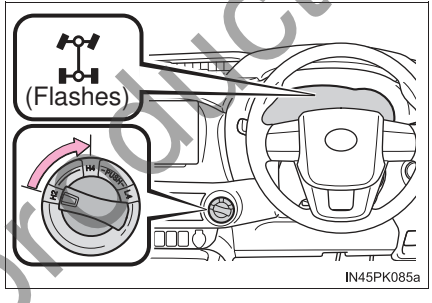

Reduce the vehicle speed to less than 100 km/h (62 mph), or return the front-wheel drive control switch to H2 and try step 1 again.

3 Check that the four-wheel drive indicator light comes on.

The four-wheel drive indicator light comes on when switching the transfer mode is completed.

If the four-wheel drive indicator light does not stop flashing after turning the front-wheel drive control switch from H2 to H4, perform any of the followings while driving straight.

- Accelerating
- Decelerating
- Driving in reverse

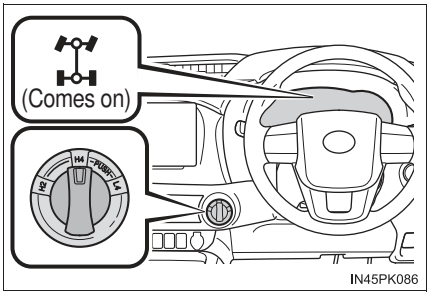

The four-wheel drive indicator light may not stop flashing if the front-wheel drive control switch is turned from H2 to H4 while the vehicle is stopped. In this case, perform any of the followings.

- Driving forward
- Driving in reverse

Not for Reproduction

■ Shifting from H4 to H2

1 Turn the front-wheel drive control switch to H2.

The four-wheel drive indicator light flashes while switching.

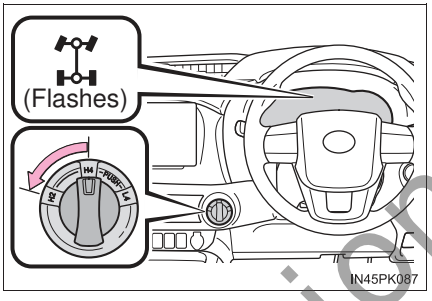

2 Check that the four-wheel drive indicator light goes off.

The four-wheel drive indicator light goes off when switching the transfer mode is completed.

If the four-wheel drive indicator light does not stop flashing after turning the front-wheel drive control switch from H4 to H2, perform the followings while driving straight.

- Accelerating
- Decelerating
- Driving in reverse

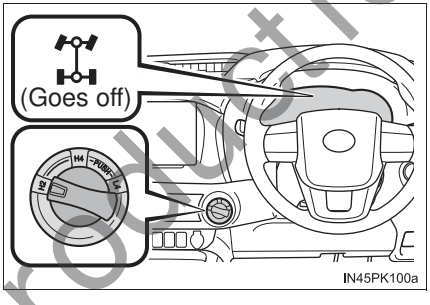

If the four-wheel drive indicator light is still flashing, perform the operations above while turning the steering wheel left and right.

Impact may be felt through the vehicle body and steering. However, this does not indicate a malfunction.

Not for Reproduction

Shifting between H4 and L4 (automatic transmission)

■ Shifting from H4 to L4

1 Stop the vehicle.

The transfer mode cannot be switched if the vehicle is moving.

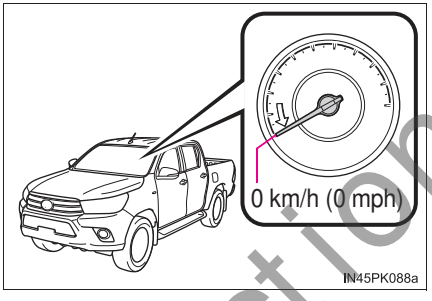

2 Shift the shift lever to N.

Keep the shift lever in N until switching the transfer mode is completed (indicator on).

The transfer mode cannot be switched if the shift lever is in other than N.

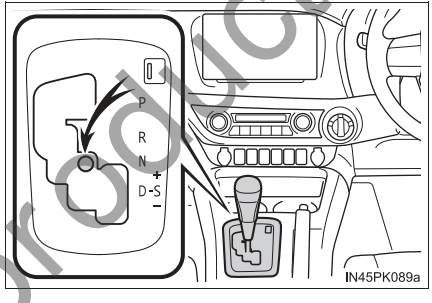

3 Push and turn the front-wheel drive control switch to L4.

The low speed four-wheel drive indicator light flashes while switching.

If turning the front-wheel drive control switch without following steps 1 and 2, the low speed four-wheel drive indicator light flashes and a buzzer sounds. Return the front-wheel drive control switch to H4 and try steps 1 and 2 again.

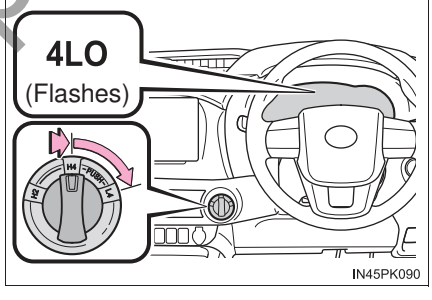

If the shift lever is shifted to other than N while the low speed four-wheel drive indicator light is flashing, gear noise may be caused. Immediately shift the shift lever to N and wait until switching the transfer mode is completed.

Not for Reproduction

4 Check that the low speed four-wheel drive indicator light comes on.

The low speed four-wheel drive indicator light comes on when switching the transfer mode is completed.

Shift the shift lever from N to D or R to drive the vehicle.

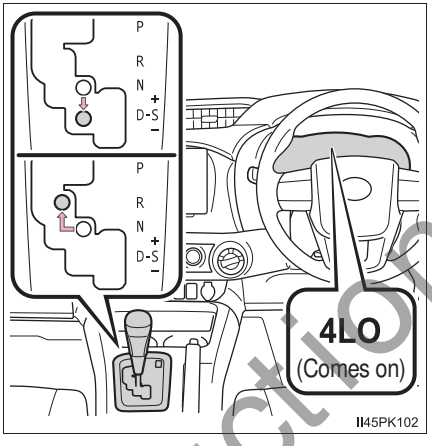

■ Shifting from L4 to H4

1 Stop the vehicle.

The transfer mode cannot be switched if the vehicle is moving.

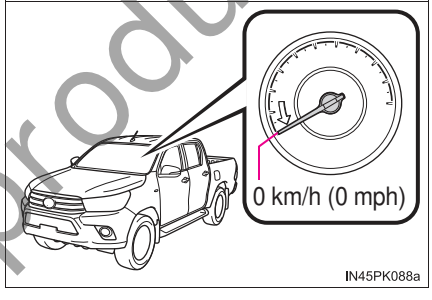

2 Shift the shift lever to N.

Keep the shift lever in N until switching the transfer mode is completed (indicator off).

The transfer mode cannot be switched if the shift lever is in other than N.

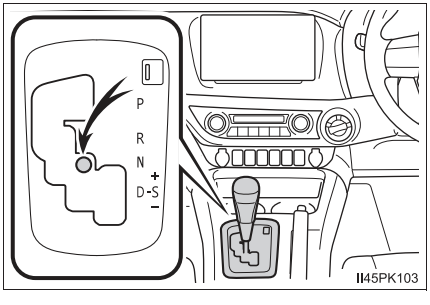

Not for Reproduction

3 Turn the front-wheel drive control switch to H4.

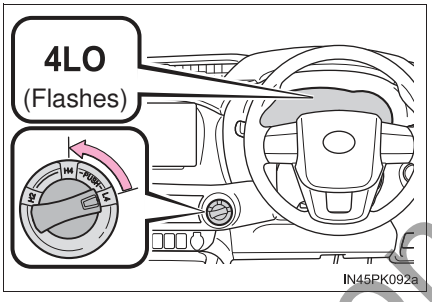

The low speed four-wheel drive indicator light flashes while switching.

If turning the front-wheel drive control switch without following steps 1 and 2, the low speed four-wheel drive indicator light flashes and a buzzer sounds. Return the front-wheel drive control switch to L4 and try steps 1 and 2 again.

If the shift lever is shifted to other than N while the low speed four-wheel drive indicator light is flashing, gear noise may be caused. Immediately shift the shift lever to N and wait until switching the transfer mode is completed.

4 Check that the low speed four-wheel drive indicator light goes off.

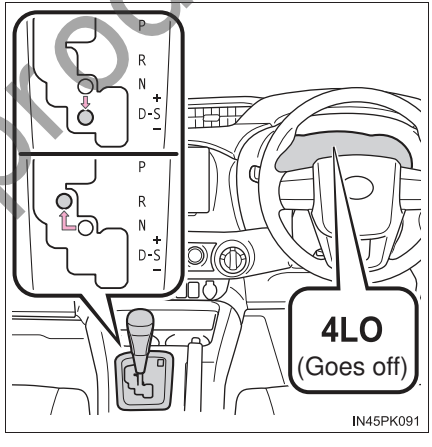

The low speed four-wheel drive indicator light goes off when switching the transfer mode is completed.

Shift the shift lever from N to D or R to drive the vehicle.

NOTICE

Shifting between H4 and L4

Do not shift the shift lever to other than N or depress the accelerator pedal while the low speed four-wheel drive indicator light is flashing. Failure to do so may cause gear noise and result in a malfunction.

Not for Reproduction

Shifting between H4 and L4 (manual transmission)

■ Shifting from H4 to L4

1 Stop the vehicle.

The transfer mode cannot be switched if the vehicle is moving.

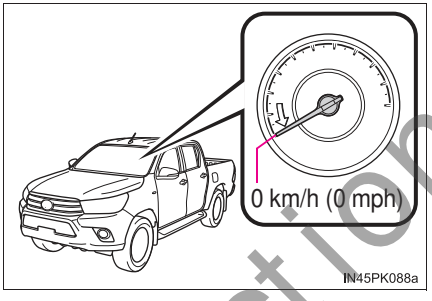

2 Firmly depress the clutch pedal.

Keep depressing the clutch pedal until switching the transfer mode is completed (indicator on).

The transfer mode cannot be switched if the clutch pedal is not fully depressed.

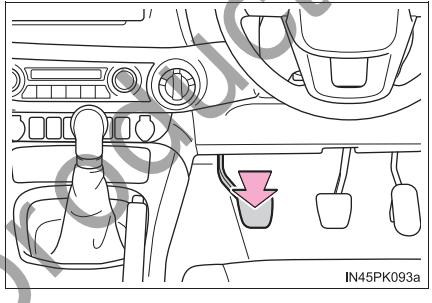

3 Push and turn the front-wheel drive control switch to L4.

The low speed four-wheel drive indicator light flashes while switching.

If turning the front-wheel drive control switch without following steps 1 and 2, the low speed four-wheel drive indicator light flashes and a buzzer sounds. Return the front-wheel drive control switch to H4 and try steps 1 and 2 again.

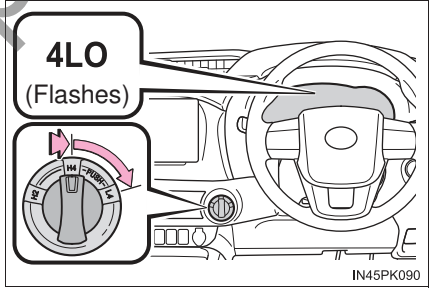

If the clutch pedal is released while the low speed four-wheel drive indicator light is flashing, gear noise may be caused. Immediately depress the clutch pedal firmly and wait until switching the transfer mode is completed.

Not for Reproduction

4 Check that the low speed four-wheel drive indicator light comes on.

The low speed four-wheel drive indicator light comes on when switching the transfer mode is completed.

Release the clutch pedal to drive the vehicle.

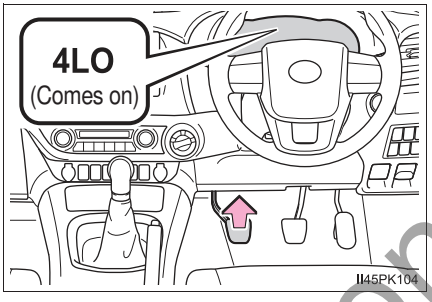

■ Shifting from L4 to H4

1 Stop the vehicle.

The transfer mode cannot be switched if the vehicle is moving.

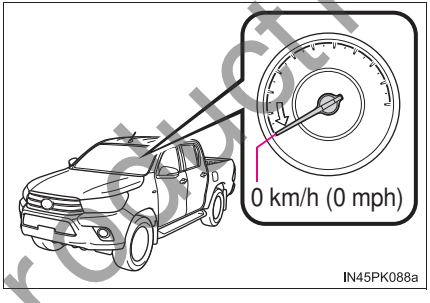

2 Firmly depress the clutch pedal.

Keep depressing the clutch pedal until switching the transfer mode is completed (indicator off).

The transfer mode cannot be switched if the clutch pedal is not fully depressed.

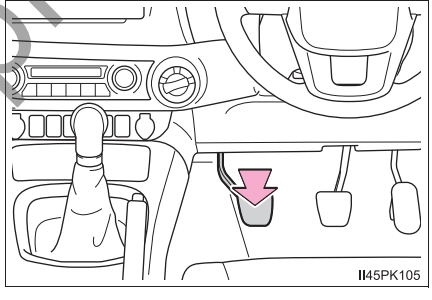

Not for Reproduction

3 Turn the front-wheel drive control switch to H4.

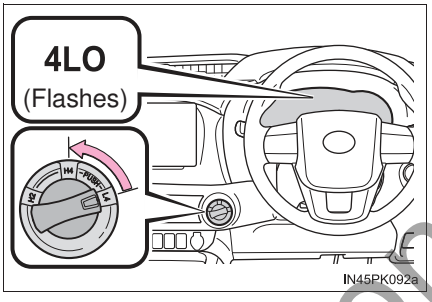

The low speed four-wheel drive indicator light flashes while switching.

If turning the front-wheel drive control switch without following steps 1 and 2, the low speed four-wheel drive indicator light flashes and a buzzer sounds. Return the front-wheel drive control switch to L4 and try steps 1 and 2 again.

If the clutch pedal is released while the low speed four-wheel drive indicator light is flashing, gear noise may be caused. Immediately depress the clutch pedal firmly and wait until switching the transfer mode is completed.

4 Check that the low speed four-wheel drive indicator light goes off.

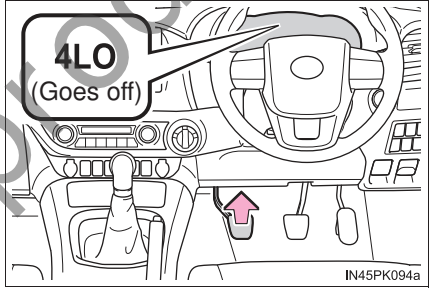

The low speed four-wheel drive indicator light goes off when switching the transfer mode is completed.

Release the clutch pedal to drive the vehicle.

NOTICE

Shifting between H4 and L4

Do not release the clutch pedal or depress the accelerator pedal while the low speed four-wheel drive indicator light is flashing. Failure to do so may cause gear noise and result in a malfunction.

Not for Reproduction

■ **Four-wheel drive usage frequency**

You should drive in four-wheel drive for at least 16 km (10 miles) each month. This will assure that the front drive components are lubricated.

■ **Shifting between H2 and H4**

If you have trouble shifting in cold weather, reduce your speed or stop the vehicle and reshift.

■ **Shifting to L4**

VSC is automatically turned off.

■ **When driving on dry paved surface roads and expressway**

Use H2 position. If the vehicle is driven in H4 or L4 position for a long time, a warning buzzer sounds, and the four-wheel drive indicator light flashes rapidly or a warning message is shown on the multi-information display (if equipped). If the warning message is shown on the multi-information display, follow the message.

■ **If "DIFFERENTIAL OIL TEMP HIGH SHIFT TO 2WD MODE COOLING TIME REQUIRED"/"Differential oil temp high Shift to 2WD mode Cooling time required" is shown on the multi-information display (vehicles with multi-information display)**

The differential oil temperature is too high.

Turn the front-wheel drive control switch to H2, and wait until the warning message goes off.

⚠ WARNING

■ **While driving**

- Never turn the front-wheel drive control switch from H2 to H4 if the wheels are slipping. Stop the slipping or spinning before shifting.
- For normal driving on dry and hard surface roads, use H2 position. Driving on dry and hard surface roads in H4 or L4 position may cause drive component oil leakage, seizure, or other problems resulting in an accident. Further, it may cause tire wear and increased fuel consumption.
- Avoid turning suddenly in H4 or L4 position. If you do turn suddenly, the difference in turning speeds between the front and rear wheels may have a similar effect to braking, thus making driving difficult.

Not for Reproduction

Rear differential lock system*

The rear differential lock system is provided for use only when wheel spinning occurs in a ditch or on a slippery or ragged surface.

This differential lock system is effective in case one of the rear wheels is spinning.

Press the rear differential lock switch to lock the rear differential.

The rear differential lock indicator comes on.

To unlock the rear differential, push the switch again.

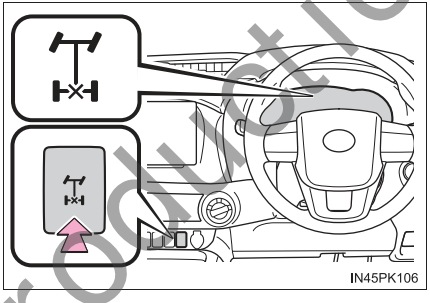

Not for Reproduction

*: If equipped

Using the rear differential lock system

1 Before using the rear differential lock system, turn the front-wheel drive control switch to L4 and try to move the vehicle. (→P. 223, 226)

If this is not sufficient, use the rear differential lock system as well.

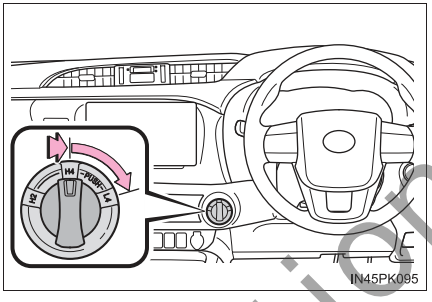

2 Reduce the vehicle speed to less than 8 km/h (5 mph).

Make sure that the wheels are not spinning.

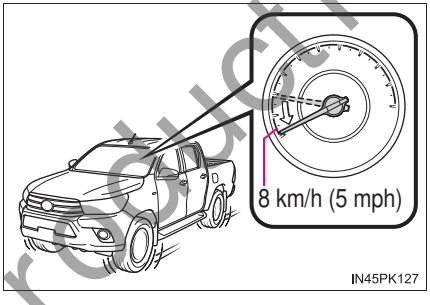

3 Press the rear differential lock switch.

The rear differential lock indicator flashes while the rear differential is being locked.

If pressing the rear differential lock switch without following steps 1 and 2, the rear differential lock indicator flashes three times and a buzzer sounds three times, and the rear differential cannot be locked. Try steps 1 and 2 again.

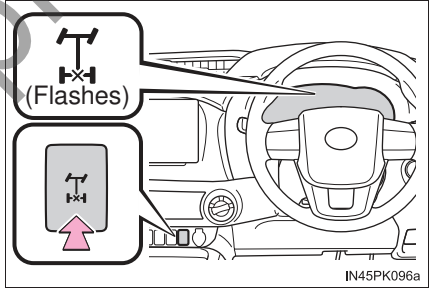

Not for Reproduction

4 Gently depress the accelerator pedal.

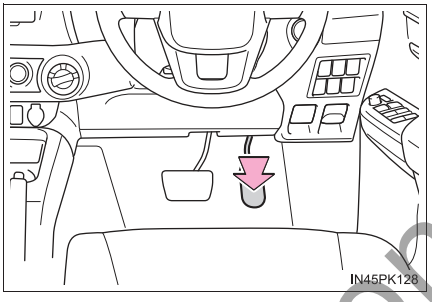

5 Check that the rear differential lock indicator comes on.

The rear differential lock indicator comes on when locking the rear differential is completed.

If the rear differential lock indicator does not stop flashing after pressing the rear differential lock switch, perform any of the followings while turning the steering wheel left and right.

- Accelerating
- Decelerating

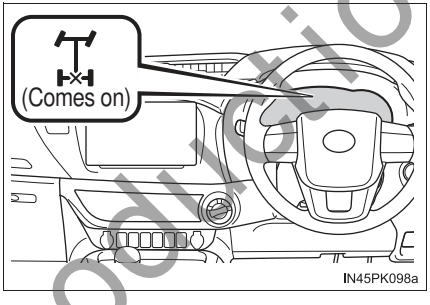

Unlock the rear differential as soon as the vehicle moves. To unlock the rear differential, push the switch again.

Not for Reproduction

Locking the rear differential

The following systems do not operate when the rear differential is locked.
It is normal operation for the ABS warning light, VSC OFF indicator and “TRC OFF” indicator (if equipped) to be on or for “TRC TURNED OFF”/“TRC turned off” to be displayed on the multi-information display (if equipped) at this time.

- ABS
- Brake assist
- VSC
- TRC/A-TRC
- Trailer Sway Control
- Hill-start assist control
- Downhill assist control (if equipped)

For easy unlocking

Slightly turn the steering wheel in either direction while the vehicle is in motion.

Automatic system cancelation of the rear differential lock system

The rear differential lock is also unlocked in any of the following situations:

- The front-wheel drive control switch is turned to H2 or H4
- The engine switch is turned to the “ACC” or “LOCK” position (vehicles without smart entry & start system) or ACCESSORY or off (vehicles with smart entry & start system)

After unlocking the rear differential

Check that the indicator goes off.

WARNING

To avoid an accident

Failure to observe the following precautions may result in an accident.

- Do not use the rear differential lock system except when wheel spinning occurs in a ditch or on a slippery or rugged surface. Large steering effort and careful cornering control will be required.
- Do not lock the rear differential until the wheels have stopped spinning. Otherwise, the vehicle may move in an unexpected direction when the differential lock is engaged, resulting in an accident. This may also lead to possible damage to rear differential lock component parts.
- Do not drive over 8 km/h (5 mph) when the differential is locked.
- Do not keep driving with the rear differential lock switch on.

Not for Reproduction

Driving assist systems

To keep driving safety and performance, the following systems operate automatically in response to various driving situations. Be aware, however, that these systems are supplementary and should not be relied upon too heavily when operating the vehicle.

◆ ABS (Anti-lock Brake System)

Helps to prevent wheel lock when the brakes are applied suddenly, or if the brakes are applied while driving on a slippery road surface

◆ Brake assist

Generates an increased level of braking force after the brake pedal is depressed when the system detects a panic stop situation

◆ VSC (Vehicle Stability Control)

Helps the driver to control skidding when swerving suddenly or turning on slippery road surfaces

◆ TRC (Traction Control) for 2WD models, Pre Runner and H2 position on 4WD models

Helps to maintain drive power and prevent the drive wheels from spinning when starting the vehicle or accelerating on slippery roads

◆ A-TRC (Active Traction Control) for H4 and L4 position on 4WD models

Helps to maintain drive power and prevent the four wheels from spinning when starting the vehicle or accelerating on slippery roads

◆ Hill-start assist control

Helps to reduce the backward movement of the vehicle when starting on an uphill

◆ Emergency brake signal

When the brakes are applied suddenly, the emergency flashers automatically flash to alert the vehicle behind.

Not for Reproduction

◆ Trailer Sway Control

Helps the driver to control trailer sway by selectively applying brake pressure for individual wheels and reducing driving torque when trailer sway is detected.
Trailer Sway Control is part of the VSC system and will not operate if VSC is turned off or experiences a malfunction.

When the TRC/A-TRC/VSC/Trailer Sway Control systems are operating

The slip indicator will flash while the TRC/A-TRC/VSC/Trailer Sway Control systems are operating.

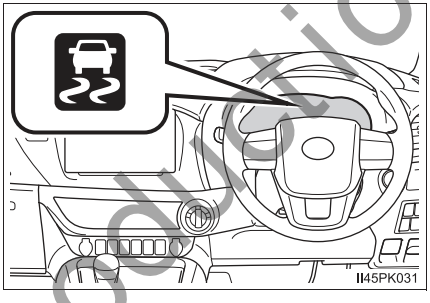

Disabling the TRC/A-TRC systems

If the vehicle gets stuck in mud, dirt or snow, the TRC/A-TRC systems may reduce power from the engine to the wheels. Pressing OFF to turn the system off may make it easier for you to rock the vehicle in order to free it.

▶ Vehicles without multi-information display

To turn the TRC/A-TRC systems off, quickly press and release OFF.

The “TRC OFF” indicator light will come on.

Press OFF again to turn the system back on.

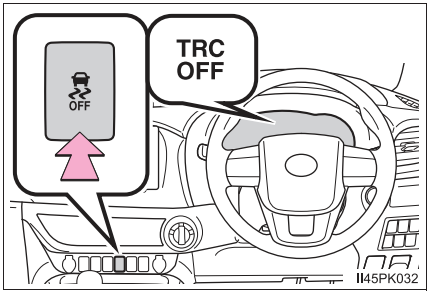

Not for Reproduction

▶ Vehicles with multi-information display

To turn the TRC/A-TRC systems off, quickly press and release .

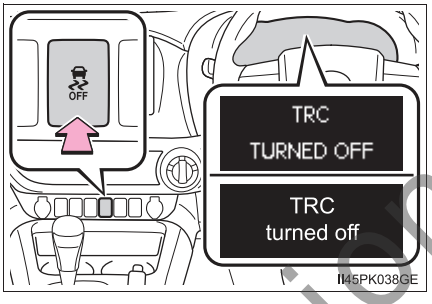

The “TRC TURNED OFF”/“TRC turned off” will be shown on the multi-information display.

Press again to turn the system back on.

■Turning off TRC, A-TRC, VSC and Trailer Sway Control systems

▶ Vehicles without multi-information display

To turn the TRC, A-TRC, VSC and Trailer Sway Control systems off, press and hold for more than 3 seconds while the vehicle is stopped.

The “TRC OFF” indicator light and VSC OFF indicator light will come on.

Press again to turn the system back on.

▶ Vehicles with multi-information display

To turn the TRC, A-TRC, VSC and Trailer Sway Control systems off, press and hold for more than 3 seconds while the vehicle is stopped.

The VSC OFF indicator light will come on and the “TRC TURNED OFF”/“TRC turned off” will be shown on the multi-information display.

Press again to turn the system back on.

Not for Reproduction

■ **When the "TRC OFF" indicator light comes on or the message is displayed on the multi-information display showing that TRC/A-TRC has been disabled even if [TRC OFF] has not been pressed**

TRC, A-TRC and downhill assist control cannot be operated. Contact your Toyota dealer.

■ **Sounds and vibrations caused by the ABS, brake assist, VSC, Trailer Sway Control, TRC, A-TRC and the hill-start assist control systems**

- A sound may be heard from the engine compartment when the brake pedal is depressed repeatedly, when the engine is started or just after the vehicle begins to move. This sound does not indicate that a malfunction has occurred in any of these systems.
- Any of the following conditions may occur when the above systems are operating. None of these indicates that a malfunction has occurred.
  - Vibrations may be felt through the vehicle body and steering.
  - A motor sound may be heard also after the vehicle comes to a stop.
  - The brake pedal may pulsate slightly after the ABS is activated.
  - The brake pedal may move down slightly after the ABS is activated.

■ **Automatic reactivation of TRC, A-TRC, VSC and Trailer Sway Control systems**

After turning the TRC, A-TRC, VSC and Trailer Sway Control systems off, the systems will be automatically re-enabled in the following situations:

- When the engine switch is turned to the "LOCK" position (vehicles without smart entry & start system) or off (vehicles with smart entry & start system).
- If only the TRC/A-TRC system is turned off, the TRC/A-TRC will turn on when vehicle speed increases.
  If the TRC, A-TRC, VSC and Trailer Sway Control systems are turned off, automatic re-enabling will not occur when vehicle speed increases.

■ **Operating conditions of the hill-start assist control**

When the following four conditions are met, the hill-start assist control will operate:

- Vehicles with automatic transmission: The shift lever is in a position other than P or N (when starting off forward/backward on an upward incline)
  Vehicles with manual transmission: The shift lever is in a position other than R when starting off forward on an upward incline, or the shift lever is in R when starting off backward on an upward incline.
- The vehicle is stopped
- The accelerator pedal is not depressed
- The parking brake is not engaged

Not for Reproduction

Automatic system cancelation of the hill-start assist control

The hill-start assist control will turn off in any of the following situations:

- Vehicles with automatic transmission: The shift lever is shifted to P or N
  Vehicles with manual transmission: The shift lever is shifted to R when starting off forward on an upward incline, or the shift lever is shifted to other than R when starting off backward on an upward incline.
- The accelerator pedal is depressed
- The parking brake is engaged
- 2 seconds at maximum elapsed after the brake pedal is released

Operating conditions of emergency brake signal

When the following three conditions are met, the emergency brake signal will operate:

- The emergency flashers are off.
- Actual vehicle speed is over 55 km/h (35 mph).
- The brake pedal is depressed in a manner that cause the system to judge from the vehicle deceleration that this is a sudden braking operation.

Automatic system cancelation of emergency brake signal

The emergency brake signal will turn off in any of the following situations:

- The emergency flashers are turned on.
- The brake pedal is released.
- The system judges from the vehicle deceleration that is not a sudden braking operation.

Not for Reproduction

WARNING

■ **The ABS does not operate effectively when**

- The limits of tire gripping performance have been exceeded (such as excessively worn tires on a snow covered road).
- The vehicle hydroplanes while driving at high speed on wet or slick roads.

■ **Stopping distance when the ABS is operating may exceed that of normal conditions**

The ABS is not designed to shorten the vehicle's stopping distance. Always maintain a safe distance from the vehicle in front of you, especially in the following situations:

- When driving on dirt, gravel or snow-covered roads
- When driving with tire chains
- When driving over bumps in the road
- When driving over roads with potholes or uneven surfaces

■ **TRC/A-TRC/VSC may not operate effectively when**

Directional control and power may not be achievable while driving on slippery road surfaces, even if the TRC/A-TRC/VSC system is operating.
Drive the vehicle carefully in conditions where stability and power may be lost.

■ **Hill-start assist control does not operate effectively when**

- Do not overly rely on the hill-start assist control. The hill-start assist control may not operate effectively on steep inclines and roads covered with ice.
- Unlike the parking brake, the hill-start assist control is not intended to hold the vehicle stationary for an extended period of time. Do not attempt to use the hill-start assist control to hold the vehicle on an incline, as doing so may lead to an accident.

■ **When the TRC/VSC/Trailer Sway Control is activated**

The slip indicator flashes. Always drive carefully.
Reckless driving may cause an accident. Exercise particular care when the indicator flashes.

■ **When the TRC/A-TRC/VSC/Trailer Sway Control systems are turned off**

Be especially careful and drive at a speed appropriate to the road conditions. As these are the systems to help ensure vehicle stability and driving force, do not turn the TRC/A-TRC/VSC/Trailer Sway Control systems off unless necessary.

Not for Reproduction

WARNING

■ **Replacing tires**

Make sure that all tires are of the specified size, brand, tread pattern and total load capacity. In addition, make sure that the tires are inflated to the recommended tire inflation pressure level.

The ABS, TRC, A-TRC, VSC, Trailer Sway Control, hill-start assist control and downhill assist control systems will not function correctly if different tires are installed on the vehicle.
Contact your Toyota dealer for further information when replacing tires or wheels.

■ **Handling of tires and the suspension**

Using tires with any kind of problem or modifying the suspension will affect the driving assist systems, and may cause a system to malfunction.

■ **Trailer Sway Control precaution**

The Trailer Sway Control system is not able to reduce trailer sway in all situations. Depending on many factors such as the conditions of the vehicle, trailer, road surface, and driving environment, the Trailer Sway Control system may not be effective. Refer to your trailer owner's manual for information on how to tow your trailer properly.

■ **If trailer sway occurs**

Observe the following precautions.
Failing to do so may cause death or serious injury.

- Firmly grip the steering wheel. Steer straight ahead.
  Do not try to control trailer sway by turning the steering wheel.
- Begin releasing the accelerator pedal immediately but very gradually to reduce speed.
  Do not increase speed. Do not apply vehicle brakes.

If you make no extreme correction with the steering or brakes, your vehicle and trailer should stabilize. (→P. 161)

Not for Reproduction

Downhill assist control system*

The downhill assist control system helps to prevent excessive speed on steep downhill slopes.
The system will operate when the vehicle is traveling under 30 km/h (18 mph) and transfer mode is in L4 or H4.

System operation

Press the “DAC” switch. The downhill assist control system indicator will come on and the system will operate.

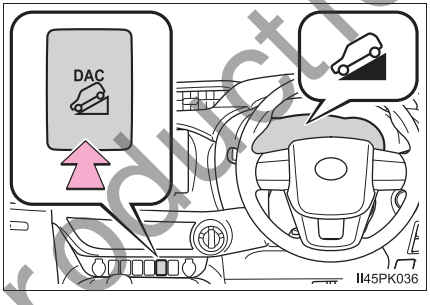

When the system is in operation, the slip indicator will flash, and the stop lights/high mounted stop lights will be lit. A sound may also occur during the operation. This does not indicated a malfunction.

Turning off the system

Press the “DAC” switch while the system is in operation. The downhill assist control system indicator will flash as the system gradually ceases operation, and will turn off when the system is fully off.

Press the “DAC” switch while the downhill assist control system indicator is flashing to start the system again.

Not for Reproduction

*: If equipped

Operating tips

The system will operate when the shift lever is in a position other than P, however to make effective use of the system it is recommended to select a lower shift range.

The system will not operate when

- The transfer mode is in H2.
- The rear differential is locked.

If the downhill assist control system indicator flashes

- In the following situations, the indicator flashes and the system will not operate:
  - The transfer mode is not in L4 or H4.
  - The rear differential is locked.
  - The shift lever is in P.
  - The accelerator or brake pedal is depressed.
  - The vehicle speed exceeds approximately 30 km/h (18 mph).
  - The brake system overheats.
- In the following situations, the indicator flashes to alert the driver, but the system will operate:
  - The shift lever is in N.
  - The “DAC” switch is turned off while the system is operating.
    The system will gradually ceases operation. The indicator will flash during operation, and then go off when the system is fully off.

When the downhill assist control system is operated continuously

This may cause the brake actuator to overheat. In this case, the downhill assist control system will stop operating, a buzzer will sound and the downhill assist control system indicator will start flashing, and “TRC turned off” is shown on the multi-information display. Refrain from using the system until the downhill assist control system indicator stays on and “TRC turned off” displayed on the multi-information display goes out. (The vehicle can be driven normally during this time.)

Sounds and vibrations caused by the downhill assist control system

- A sound may be heard from the engine compartment when the engine is started or just after the vehicle begins to move. This sound does not indicate that a malfunction has occurred in downhill assist control system.
- Either of the following conditions may occur when the downhill assist control system is operating. None of these are indicators that a malfunction has occurred.
  - Vibrations may be felt through the vehicle body and steering.
  - A motor sound may be heard after the vehicle comes to a stop.

Not for Reproduction

System malfunction

In the following cases, have your vehicle checked by your Toyota dealer.

- The downhill assist control system indicator does not come on when the engine switch is turned to IGNITION ON mode.
- The downhill assist control system indicator does not come on when the “DAC” switch is pressed.
- The slip indicator comes on.

WARNING

When using downhill assist control system

Do not rely overmuch on the downhill assist control system. This function does not extend the vehicle’s performance limitations. Always thoroughly check the road conditions, and drive safely.

The system may not operate on the following surfaces, which may lead to an accident causing death or serious injury

- Slippery surfaces such as wet or muddy roads
- Icy surface
- Unpaved roads

Not for Reproduction

DPF (Diesel Particulate Filter) system*

When the deposit collected by the filter reaches a predetermined amount, it is automatically regenerated.

◆ Regeneration

Regeneration is performed as necessary in accordance with driving conditions.

◆ System characteristics

The DPF system has the following characteristics:

- Idle speed increases during regeneration
- The smell of the exhaust gas differs from that of a conventional diesel vehicle
- White smoke may be emitted from the exhaust pipe during regeneration. However, this does not indicate a malfunction.

DPF system failure warning

▶ Vehicles without DPF system switch

- If the DPF system warning light turns on (vehicles without multi-information display) or the DPF system warning message “DPF FULL SEE OWNER’S MANUAL”/“DPF full See owner’s manual” appears on the display (vehicles with multi-information display), drive continuously. (→P. 467, 472)
- If the DPF system warning light flashes rapidly (vehicles without multi-information display) or the DPF system warning message “DPF FULL VISIT YOUR DEALER”/“DPF full Visit your dealer” appears on the display (vehicles with multi-information display), the malfunction indicator lamp comes on, have the vehicle inspected by your Toyota dealer immediately.

Not for Reproduction

*: If equipped

▶ Vehicles with DPF system switch

● If the DPF system warning light turns on (vehicles without multi-information display) or the DPF system warning message “DPF FULL MANUAL REGENERATION REQUIRED SEE OWNER’S MANUAL”/“DPF full Manual regeneration required See owner’s manual” appears on the display (vehicles with multi-information display), follow the procedure below to regenerate.

1 Stop the vehicle in a safe place.

2 Shift the shift lever to P (automatic transmission) or N (manual transmission), and firmly set the parking brake.

Do not stop the engine.
Also, make sure that there are no flammable materials near the exhaust pipe. (→P. 248)

Check the engine is warmed up. If the engine is cold, warm up the engine by depressing the accelerator pedal.*1

3 Press the DPF system switch.

▶ Vehicles without multi-information display

The DPF system warning light will change from solid to slow flashing, and the idling engine speed will increase.

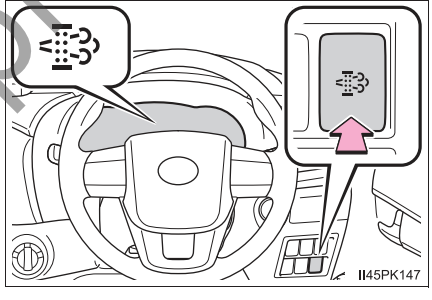

Not for Reproduction

▶ Vehicles with multi-information display

The DPF system warning message shown in the illustration appears on the display, and the idling engine speed will increase.

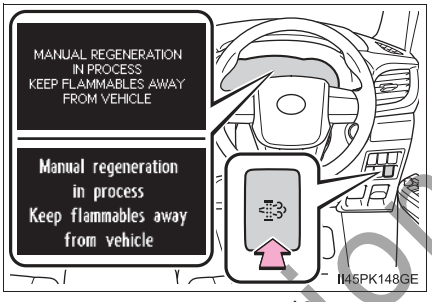

Regeneration will take around 30 - 40 minutes to complete.*2

When the DPF system warning light or the DPF system warning message goes out, the idling engine speed will have finished returning to normal.

The DPF system switch may not operate when the vehicle is higher than 4000 m (13123 ft.) above sea level.

*1: Depending on the situation, it may be necessary to depress the accelerator pedal until the engine speed is increased to 3000 rpm.
If the engine coolant temperature or exhaust gas temperature is low, it may take a long time to regenerate, or regeneration may be impossible.

*2: Time required for regeneration differs in accordance with the outside temperature. Also, if the engine speed is still approximately 2000 rpm 10 minutes after pressing the DPF system switch, the exhaust gas temperature may be low. In this case, depress the accelerator pedal to run the engine at approximately 3000 rpm for a while.

● If the DPF system warning light flashes rapidly (vehicles without multi-information display) or the DPF system warning message “DPF FULL VISIT YOUR DEALER”/“DPF full Visit your dealer” appears on the display (vehicles with multi-information display), the malfunction indicator lamp comes on, have the vehicle inspected by your Toyota dealer immediately.

Not for Reproduction

Regeneration with the DPF system switch (if equipped)

- After pressing the DPF system switch, depressing the accelerator pedal or clutch pedal (manual transmission) will stop regeneration. If regeneration has been stopped, restart regeneration as soon as possible.
- After regeneration is finished, race the engine several time to clean the exhaust system.

DPF system warning

Under the following driving conditions, the DPF system warning light (vehicles without multi-information display) or the DPF system warning message (vehicles with multi-information display) may come on earlier than normal.*

- When only driving at low speeds (for example 20 km/h [12 mph] or below).
- If the engine is turned on and off frequently (if the engine is not left running for more than 10 minutes at a time).

*: Differs in accordance with weather, driving conditions, etc.

Not for Reproduction

WARNING

■ **During regeneration**

Observe the following precautions.
Failure to do so may result in serious injury such as burns caused by the hot exhaust pipe and exhaust gases, or may cause a fire.

- Do not stop the vehicle where flammable materials, such as dry grass, are near the exhaust pipe.

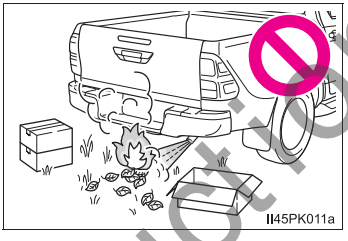

- Make sure that there are no people near the exhaust pipe.

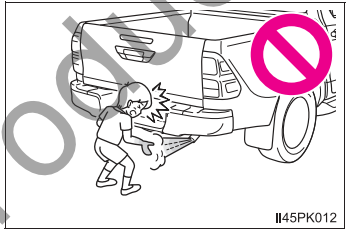

- Vehicles with DPF system switch: Do not carry out regeneration when the vehicle is in an enclosed area, such as a garage.
- Do not touch the exhaust pipe and exhaust gases during regeneration.

■ **If the malfunction indicator lamp comes on**

The malfunction indicator lamp comes on if you continue driving while the DPF system warning light is flashing (vehicles without multi-information display) or the DPF system warning message appears on the display (vehicles with multi-information display). In this event, damage may be caused to the vehicle or an accident may occur. Have the vehicle inspected by your Toyota dealer immediately.

Not for Reproduction

NOTICE

■ **To prevent the DPF system from failing**

- Do not drive for long periods of time while the DPF system warning light is flashing (vehicles without multi-information display) or the DPF system warning message “DPF FULL VISIT YOUR DEALER”/“DPF full Visit your dealer” appears on the display (vehicles with multi-information display)
- Do not use fuel other than the specified type
- Do not use engine oil other than the recommended type
- Do not modify the exhaust pipe

Not for Reproduction

Winter driving tips

Carry out the necessary preparations and inspections before driving the vehicle in winter. Always drive the vehicle in a manner appropriate to the prevailing weather conditions.

Preparation for winter

- Use fluids that are appropriate to the prevailing outside temperatures.
  - Engine oil
  - Engine coolant
  - Washer fluid
- Have a service technician inspect the condition of the battery.
- Have the vehicle fitted with four snow tires or purchase a set of tire chains for the rear tires.

  Ensure that all tires are the same size and brand, and that chains match the size of the tires.

Before driving the vehicle

Perform the following according to the driving conditions:

- Do not try to forcibly open a window or move a wiper that is frozen. Pour warm water over the frozen area to melt the ice. Wipe away the water immediately to prevent it from freezing.
- To ensure proper operation of the climate control system fan, remove any snow that has accumulated on the air inlet vents in front of the windshield.
- Check for and remove any excess ice or snow that may have accumulated on the exterior lights, vehicle's roof, chassis, around the tires or on the brakes.
- Remove any snow or mud from the bottom of your shoes before getting in the vehicle.

Not for Reproduction

When driving the vehicle

Accelerate the vehicle slowly, keep a safe distance between you and the vehicle ahead, and drive at a reduced speed suitable to road conditions.

When parking the vehicle (in the winter time or in the cold latitudes)

- Park the vehicle and move the shift lever to P (automatic transmission) or 1 or R (manual transmission) without setting the parking brake. The parking brake may freeze up, preventing it from being released. If the vehicle is parked without setting the parking brake, make sure to block the wheels.

  Failure to do so may be dangerous because it may cause the vehicle to move unexpectedly, possibly leading to an accident.
- Vehicles with automatic transmission: If the vehicle is parked without setting the parking brake, confirm that the shift lever cannot be moved out of P*.

*: The shift lever will be locked if it is attempted to be shifted from P to any other position without depressing the brake pedal. If the shift lever can be shifted from P, there may be a problem with the shift lock system. Have the vehicle inspected by your Toyota dealer immediately.

Selecting tire chains

Use the correct tire chain size when mounting the snow chains.
Chain size is regulated for each tire size.

Regulations on the use of tire chains

Regulations regarding the use of tire chains vary depending on location and type of road. Always check local regulations before installing chains.

■Tire chain installation

Observe the following precautions when installing and removing chains:

- Install and remove tire chains in a safe location.
- Install tire chains on the rear tires. Do not install tire chains on the front tires.
- Install tire chains on rear tires as tightly as possible. Retighten chains after driving 0.5 - 1.0 km (1/4 - 1/2 mile).
- Install tire chains following the instructions provided with the tire chains.

Not for Reproduction

WARNING

■ **Driving with snow tires**

Observe the following precautions to reduce the risk of accidents.
Failing to do so may result in a loss of vehicle control and cause death or serious injury.

- Use tires of the specified size.
- Maintain the recommended level of air pressure.
- Do not drive at speeds in excess of the speed limit or the speed limit specified for the snow tires being used.
- Use snow tires on all, not just some wheels.

■ **Driving with tire chains**

Observe the following precautions to reduce the risk of accidents.
Failing to do so may result in the vehicle being unable to be driven safely, and may cause death or serious injury.

- Do not drive in excess of the speed limit specified for the tire chains being used, or 50 km/h (30 mph), whichever is lower.
- Avoid driving on bumpy road surfaces or over potholes.
- Avoid sudden acceleration, abrupt steering, sudden braking and shifting operations that cause sudden engine braking.
- Slow down sufficiently before entering a curve to ensure that vehicle control is maintained.

Not for Reproduction

Not for Reproduction

5-1. Using the multimedia system
Audio system types.....256
Multimedia system.....258
5-2. Basic Operations
Multimedia system Operations.....260
Steering wheel audio switches.....264
AUX port/USB port.....265
Basic Audio Operations.....267
5-3. Setup
“Setup” menu.....269
General settings.....270
Audio settings.....272
Display settings.....274
5-4. Using the audio system
Selecting the audio source.....276
List screen operation.....278
Optimal use of the audio system.....281
Audio screen adjustment.....283

Not for Reproduction

5-5. Using the radio
Radio operation 285
5-6. Playing an audio CD and MP3/WMA/AAC discs
CD player operation.....287
5-7. Using an external device
iPod player operation.....293
USB memory device player operation.....298
Using the AUX port.....302
VTR 303
5-8. Connecting Bluetooth®
Preparations to use wireless communication 304
Registering a Bluetooth® audio player for the first time.....307
Registering a Bluetooth® phone for the first time.....308
Registering a Bluetooth® device 310
Connecting a Bluetooth® device.....312
Displaying a Bluetooth® device details.....315
Detailed Bluetooth® settings 317
5-9. Bluetooth® Audio
Listening to Bluetooth® audio.....320
5-10. Bluetooth® Phone
Using a Bluetooth® Phone 322
Making a call.....324
Receiving a call.....329
Speaking on the telephone.....330
Bluetooth® phone message function 333
Using the steering wheel switches 337
Bluetooth® phone settings 338
5-11. Contact
Contact/call history settings 340
5-12. Bluetooth®
What to do if... (Troubleshooting) 350
Bluetooth® 354

Not for Reproduction

Audio system types

▶ Vehicles with navigation system

Refer to the “Navigation and Multimedia System Owner’s Manual”.

▶ Vehicles with multimedia system

● Type A: Refer to the “Navigation and Multimedia System Owner’s Manual”.

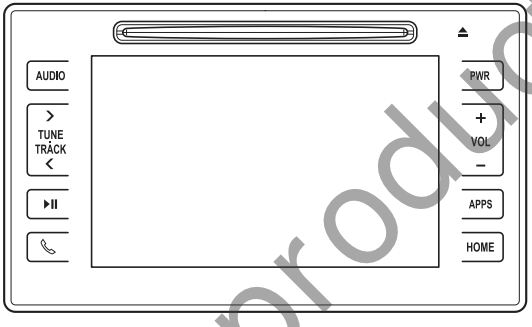

II50PK024a

● Type B: →P. 258

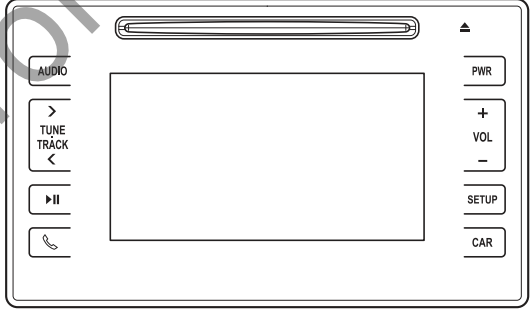

II50PK086a

Not for Reproduction

Using cellular phones

Interference may be heard through the audio system's speakers if a cellular phone is being used inside or close to the vehicle while the audio system is operating.

NOTICE

To prevent battery discharge

Do not leave the audio system on longer than necessary when the engine stopped.

To avoid damaging the audio system

Take care not to spill drinks or other fluids over the audio system.

Not for Reproduction

Multimedia system*

Multimedia system functions

The following functions can be used on multimedia system.

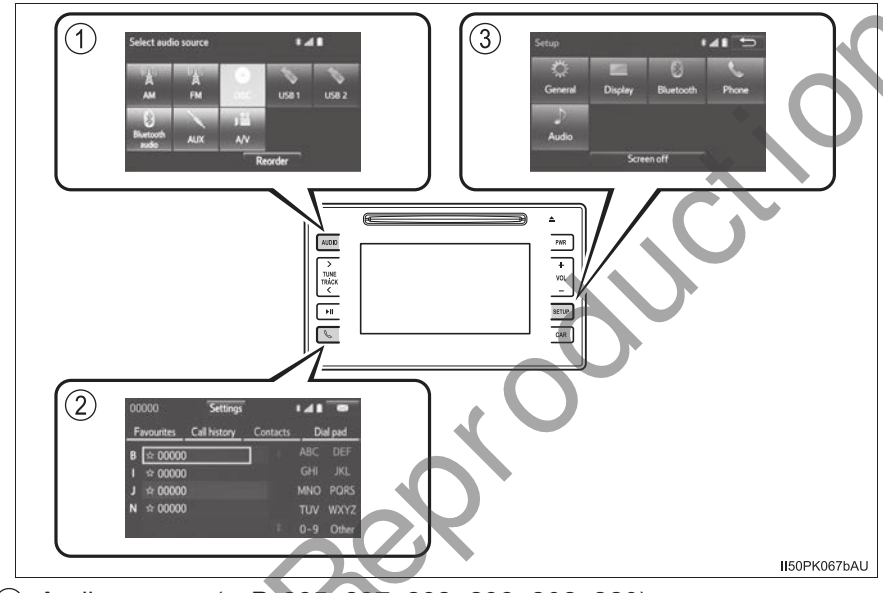

① Audio system (→P. 285, 287, 293, 298, 302, 320)
Radio, CD, iPod, USB, AUX, A/V and Bluetooth® audio can be played to.

② Bluetooth® hands-free system (→P. 322)
The driver can make or receive telephone calls without talking their hands off the steering wheel.

③ Setup (→P. 269, 270, 274)
Audio system and Bluetooth® settings can be adjusted.

Not for Reproduction

*: If equipped

■ **Operating conditions**

▶ Vehicles without smart entry & start system

The engine switch is in the “ACC” or “ON” position.

▶ Vehicles with smart entry & start system

The engine switch is in ACCESSORY or IGNITION ON mode.

■ **Using cellular phones**

Interference may be heard through the audio system’s speakers if a cellular phone is being used inside or close to the vehicle while the audio system is operating. However, this does not indicate a malfunction.

WARNING

■ **Laser product**

This product is a class 1 laser product.

Do not open the cover of the player or attempt to repair the unit yourself. Refer servicing to qualified personnel.

NOTICE

■ **To prevent battery discharge**

Do not leave the audio system on longer than necessary when the engine is not running.

■ **To avoid damaging the audio system**

Take care not to spill drinks or other fluids on the audio system.

Not for Reproduction

Multimedia system Operations

Operations such as listening to audio, using the hands-free phone, confirming vehicle information and changing multimedia system settings are started by using the following buttons.

Multimedia system operation buttons

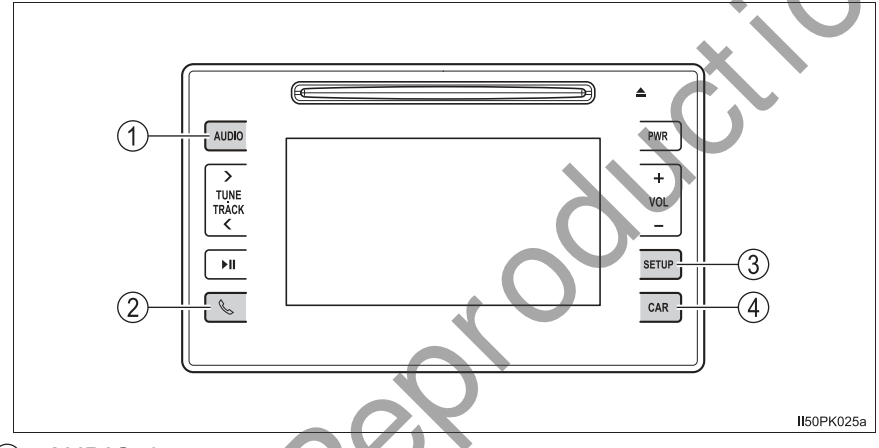

① “AUDIO” button
Display the “Select audio source” screen or audio top screen. (→P. 276)

② button
Press this button to access the Bluetooth® hands-free system. (→P. 322)

③ “SETUP” button
Press this button to customize the function settings. (→P. 269)

④ “CAR” button
Press this button to access the vehicle information. (→P. 99)

Not for Reproduction

Touch screen gestures

Operations are performed by touching the screen directly with your finger.

Operation method	Outline	Main use
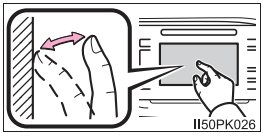	Touch Quickly touch and release once.	Changing and selecting various settings.
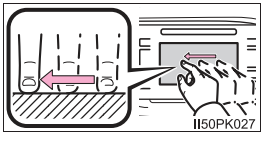	Drag* Touch the screen with your finger, and move the screen to the desired position.	Scrolling the lists, using scroll bar in lists, etc.
	Flick* Quickly move the screen by flicking with your finger.	Moving the list screen (list screen limit).

*: The above operations may not be performed on all screens. Also if the vehicle reaches a high altitude, it may become hard to perform above functions.

Not for Reproduction

Entering letters and numbers

When entering data, letters and numbers can be entered via the screen.

① Text field. Entered character(s) will be displayed.

② Select to erase one character. Select and hold to continue erasing characters.

③ Select to display other symbols.

④ Select to display the alphabet keys.

⑤ Select to enter characters in lower case or in upper case.

The screen page can be changed on the specific letter entry screen.

“1/2”: Select to shift to the next page.

“2/2”: Select to shift to the previous page.

Keyboard layout can be changed. (→P. 270)

■Capacitive touch switches

The control panel uses capacitive touch sensors.

In the following cases, incorrect operation or non-response may occur.

- If the operating section is dirty or has liquid attached to it, incorrect operation or non-response may occur.
- If the operating section receives electromagnetic waves, incorrect operation or non-response may occur.
- If wearing gloves during operation, non-response may occur.
- If fingernails are used to operate the system, non-response may occur.
- If a touch pen is used to operate the system, non-response may occur.
- If the palm of your hand touches the operating section, incorrect operation may occur.
- If operations are performed quickly, non-response may occur.

Not for Reproduction

■ **When using the touch screen**

- Dimmed screen buttons cannot be operated.
- If the screen is cold, the display may be dark, or the system may seem to be operating slightly slower than normal.
- The screen may seem dark and hard to see when viewed through sunglasses. Change your angle of viewing, adjust the display on the “Display settings” screen (→P. 274) or remove your sunglasses.

NOTICE

■ **To avoid damaging the touch screen**

- To prevent damaging the screen, lightly touch the screen buttons with your finger.
- Do not use objects other than your finger to touch the screen.
- Wipe off fingerprints using a glass cleaning cloth. Do not use chemical cleaners to clean the screen, as they may damage the touch screen.

Not for Reproduction

Steering wheel audio switches

Some audio features can be controlled using the switches on the steering wheel.
Operation may differ depending on the type of multimedia system or navigation system. For details, refer to the manual provided with the multimedia system or navigation system.

Operating the multimedia system using the steering wheel switches

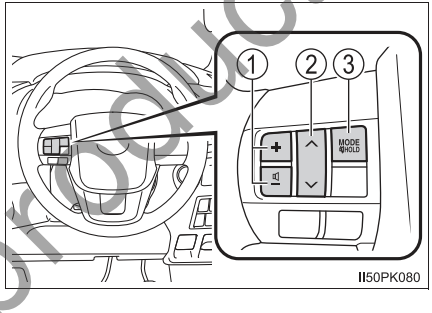

① Volume switch
- Press: Increase or decrease the volume
- Press and hold: Continuously increase or decrease the volume

② “∧” “∨” switch
- Press: Move up or down preset station/station list/track/file
- Press and hold: Seek up or down continuously, fast track up or down

③ “MODE/HOLD” switch
- Press: Change audio modes
- Press and hold: Mute or pause the current operation

WARNING

■ **To reduce the risk of an accident**
Exercise care when operating the audio switches on the steering wheel.

Not for Reproduction

AUX port/USB port

Connect an iPod, USB memory device or portable audio player to the USB/AUX port as indicated below. Select “iPod”, “USB”, “AUX” or “A/V” on the audio source selection screen and the device can be operated via multimedia system.

Connecting using the USB/AUX port

■ iPod

Open the cover and connect an iPod using an iPod cable.

Turn on the power of the iPod if it is not turned on.

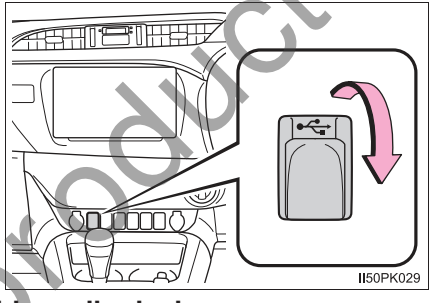

■ USB memory device and portable audio device

Open the cover and connect the device.

Turn on the power of the device if it is not turned on.

■ Portable audio player

Open the cover and connect the portable audio player.

Turn on the power of the portable audio player if it is not turned on.

Using a 4-pole AUX cable

To view a video on an iPod video or VTR, it is necessary to use a 4-pole AUX cable to connect the portable audio device.

When connecting a portable audio device to the AUX port, use a 4-pole AUX cable with a plug that matches the exact layout shown in the illustration.

Not for Reproduction

① Connected device (portable audio device, etc.)

② Left audio

③ Right audio

④ Ground

⑤ Video

When using an iPod video, a cable that has a 4-pole AUX plug and a USB connector is necessary. Connect the plug and connector to the AUX and USB ports.

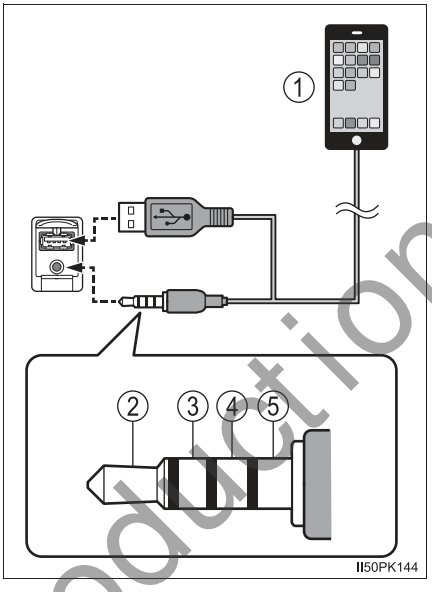

■ **When a USB hub is used**

Even if a USB hub is used to connect more than two USB devices, only the first two connected devices will be recognized.

■ **When using a 4-pole AUX cable**

If a 4-pole AUX cable with a different layout is used, audio and/or video may not be output properly.

WARNING

■ **While driving**

Do not connect a device or operate the device controls.

NOTICE

■ **To prevent damage to portable audio device or its terminal**

- Do not leave the portable audio device in the vehicle. The temperature inside the vehicle may become high, resulting in damage to the device.
- Do not push down on or apply unnecessary pressure to the portable audio device while it is connected.
- Do not insert foreign objects into the port.

Not for Reproduction

Basic Audio Operations

Basic audio operations are explained in this section.

Operating the multimedia system

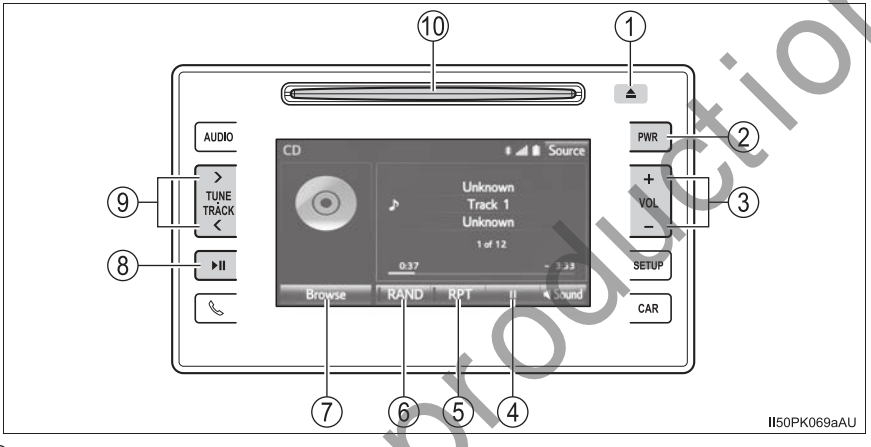

① Press this button to eject a disc

② Press to turn the audio system on and off

③ Press the “+” or “-” button to adjust the volume.

④ ▌▌: Select to pause music.
▶: Select to resume playing music.

⑤ Select to enable repeat play. (→P. 268)

⑥ Select to enable random playback. (→P. 268)

⑦ Press to display a track list.

⑧ Press to pause or resume playing music.

⑨ Press the “>” or “<” button to tune up or down for a radio station, or to access a desired track or file.
Press and hold the “>” or “<” button to seek up or down for a radio station, or to access a desired track or file.

⑩ Insert a disc into the disc slot

Not for Reproduction

Random playback

Each time “RAND” is selected, the mode changes in the following order:

Icon	Action	Target audio source
RAND	Random play of the disc/ folder/album	All
RAND	Random play of all folders	MP3/WMA/AAC disc, USB
RAND	Random play of all tracks	Bluetooth®, USB
RAND	Off	All

Repeat play

Each time “RPT” is selected, the mode changes in the following order:

Icon	Action	Target audio source
RPT	Track/file repeat	All
RPT	Folder/album repeat*	MP3/WMA/AAC disc, USB
RPT	Album repeat	Bluetooth®, USB
RPT	Off	All

*: Available except when random playback is selected.

■When turning the audio system on

The system turns on in the last mode used.

Not for Reproduction

“Setup” menu

You can adjust the multimedia system to your desired settings.

Control screen

Press the “SETUP” button to display the “Setup” screen.

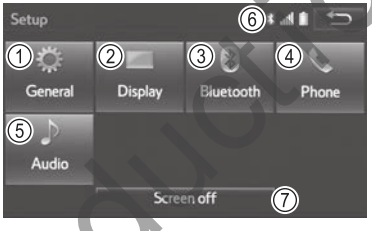

II50PK070aAU

① Select to change the operation sound, change the screen color, etc. (→P. 270)

② Select to adjust the contrast, brightness, tone and color of the screens. (→P. 274)

③ Select to set Bluetooth® phones and Bluetooth® audio devices. (→P. 306)

④ Select to set the telephone sound, contacts, message settings, etc. (→P. 338)

⑤ Select to set radio and external media settings. (→P. 272)

⑥ Displays the condition of the Bluetooth® connection. (→P. 323)

⑦ Select to turn the screen off. To turn it on, press any button.

Not for Reproduction

General settings

Settings are available for adjusting the operation sounds, screen animation, etc.

Screen for general settings

1 Press the “SETUP” button.

2 Select “General”.

3 Select the item to be set.

II50PK109AU

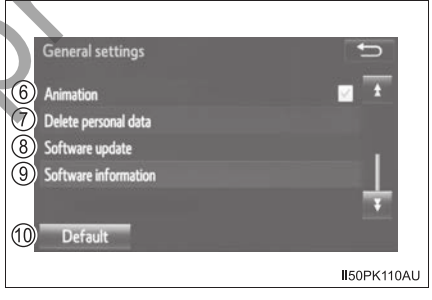

II50PK110AU

① Select to change the unit of measure for fuel consumption. (if equipped)

② Select to set the sound beeps on/off.

③ Select to change the screen color.

④ Select to change the keyboard layout.

⑤ Select to change the capacitive touch button sensor sensitivity.

⑥ Select to turn the animations on/off.

⑦ Select to delete personal data (→P. 271)

⑧ Select to update software versions. For details, contact your Toyota dealer.

⑨ Select to display the software information. Notices related to third party software used in this product are enlisted. (This includes instructions for obtaining such software, where applicable.)

⑩ Select to reset all setup items.

Not for Reproduction

Delete personal data

1 Display the “General settings” screen. (→P. 270)

2 Select “Delete personal data”.

3 Select “Delete”.

Check carefully beforehand, as data cannot be retrieved once deleted.

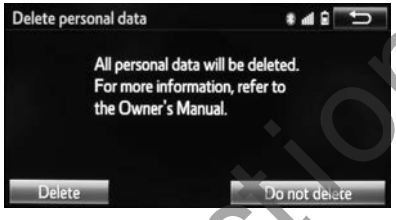

AU1003BICFOM

4 Select “Yes” when the confirmation screen appears.

Registered or changed personal settings will be deleted or returned to their default conditions.

For example:

- General settings
- Audio settings
- Telephone settings

Once initialized, the data and settings will be erased. Pay much attention when initializing the data.

This function is not available while driving.

Not for Reproduction

Audio settings

Detailed audio settings can be programmed.

Screen for audio settings

1 Press the “SETUP” button.

2 Select “Audio” on the “Setup” screen.

3 Select the item to be set.

① FM Radio settings (→P. 272)

② iPod settings (→P. 273)

③ External video settings (→P. 273)

④ Select on/off to set the cover art display settings.

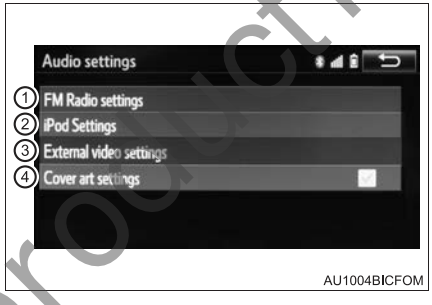

FM radio settings

1 Display the audio setting screen. (→P. 272)

2 Select “FM Radio settings”.

① FM radio text on/off

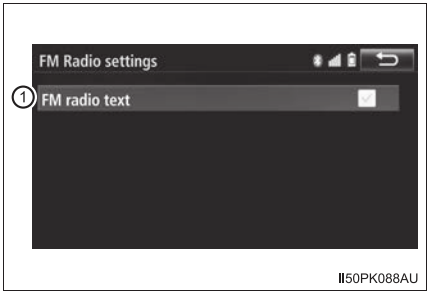

Not for Reproduction

iPod settings

1. Display the audio setting screen. (→P. 272)
2. Select “iPod Settings”.
3. Select a screen button for the desired setting.

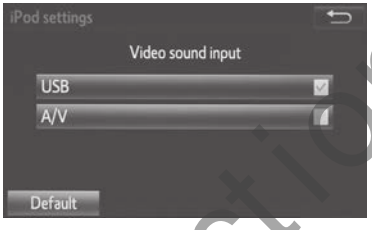

II50PK101AU

External video settings

1. Display the audio setting screen. (→P. 272)
2. Select “External video settings”.
3. Select a screen button for the desired setting.

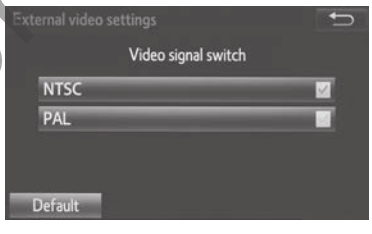

II50PK102AU

Not for Reproduction

Display settings

The brightness, contrast, tone and colour of the screen can be adjusted, and/or changed to either day or night mode.

Screen for display settings

1 Press the “SETUP” button.

2 Select “Display”.

3 Select the item to be set.

① Select to adjust the screen display. (→P. 275)

② Select to adjust the camera display. (if equipped) (→P. 275)

③ Select to adjust the video display. (→P. 275)

④ Select to turn day mode on/off. (→P. 275)

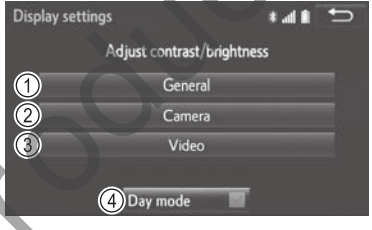

II50PK106AU

Not for Reproduction

Brightness, contrast, tone and color adjustment

The brightness, contrast, tone and colour of the screen can be adjusted.

1 Select “General”, “Camera” or “Video”.

2 Select the desired item.

AU1006BICFOM

	“-”	“+”
“Brightness”	Darker	Brighter
“Contrast”	Weaker	Stronger
“Tone”	Weaker	Stronger
	“R”	“G”
“Colour”	Red	Green

“Tone” and “Colour” can be adjusted on only the “Display (Video)” screen.

Changing between day and night mode

Depending on the position of the headlight switch, the screen changes to day or night mode. This feature is available when the headlight is switched on.

Select “Day mode”.

If the screen is set to day mode with the headlight switch turned on, this condition is memorized even with the engine turned off.

Not for Reproduction

Selecting the audio source

Switching between audio sources such as radio and CD are explained in this section.

Changing audio source

1 Press the “AUDIO” button.

2 Select “Source”.

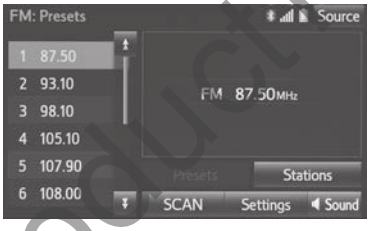

II50PK093AU

3 Select the desired audio source.

AU2001BICFOM

Not for Reproduction

Reordering the audio source

1 Select “Source”.

2 Select “Reorder”.

3 Select the desired audio source then ⏪ or ⏩ to reorder.

II50PK094AU

Using the steering wheel switches to change audio source

Press the “MODE/HOLD” switch when the audio system is turned on. The audio source changes each time the switch is pressed. If no discs are inserted in the player, or if an external device is not connected, that mode will be skipped. (→P. 264)

Not for Reproduction

List screen operation

When a list style screen is displayed, use the appropriate buttons to scroll through the list.

How to scroll

: Select to skip to the next or previous page.
Select and hold or to scroll through the displayed list.

: This indicates the displayed screen's position.

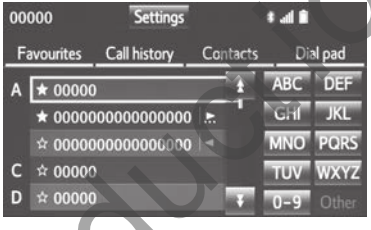

II50PK139AU

: If appears to the right of an item name, the complete name is too long to display.
Select to scroll to the end of the name.
Select to move to the beginning of the name.

Selecting all items

Select "Select all".

II50PK140AU

"Unselect all": Unselect all items in the list.

Not for Reproduction

Selecting, fast-forwarding and reversing tracks/files/songs

■ Selecting a track/file/song

Press the “>” or “<” button on “TUNE•TRACK” to select the desired track/file/song number.

To fast-forward or reverse, press and hold the “>” or “<” button on “TUNE•TRACK”.

Selecting an item from the list

① Cover art button

② “Browse” button

1 Select the cover art button or “Browse” button on the screen.

2 Select the desired item.

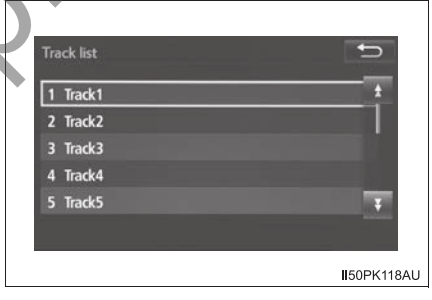

According to the audio device, the following list is displayed.

Audio source	Cover art button	“Browse” button
CD	Track	
MP3/WMA/AAC	File	Folder
Bluetooth®	Track	
iPod	Song	Selecting a play mode
USB	File/Track	

Not for Reproduction

Character jump buttons in lists

Some lists contain character screen buttons, “ABC”, “DEF” etc., which allow a direct jump to list entries that begin with the same letter as the character screen button.

Select the desired character jump buttons.

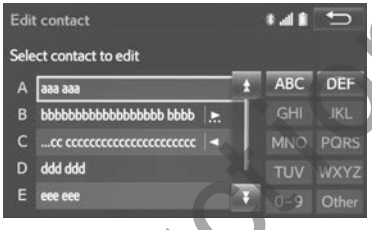

II50PK091AU

Every time the same character screen button is selected, the list starting with the subsequent character is displayed.

Not for Reproduction

Optimal use of the audio system

On the “Sound settings” screen, sound quality, volume balance and ASL settings can be adjusted.

How to adjust the sound settings and sound quality

Select “Sound” to adjust the sound settings.

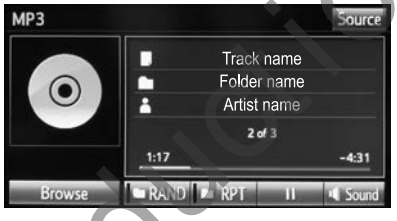

AU2003BICFOM

▶ “Sound” tab

①②③ Select “+” or “-” to adjust high/mid/low-pitched tones.

④ Select to adjust the sound balance between the front and rear speakers.

For the vehicles with 2 speakers system, the sound will be mute if the sound balance is adjusted to the maximum level at the rear.

⑤ Select to adjust the sound balance between the left and right speakers.

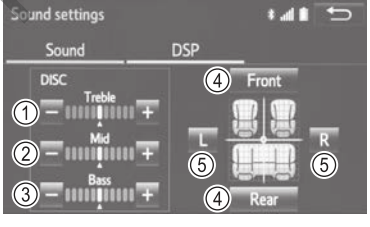

II50PK095aAU

Not for Reproduction

▶ “DSP” tab

● Automatic sound leveliser (ASL)

Select the ASL level among “High”, “Mid”, “Low” and “Off”.

AU1007BICFOM

■ **The sound quality level is adjusted individually**

The treble, mid and bass levels can be adjusted for each audio mode separately.

■ **About Automatic Sound Leveliser (ASL)**

The system adjusts to the optimum volume and tone quality according to vehicle speed to compensate for increased vehicle noise.

■ **Tone and balance**

Tone:
How good an audio program sounds is largely determined by the mix of the treble, mid and bass levels. In fact, different kinds of music and vocal programs usually sound better with different mixes of treble, mid and bass.

Balance:
A good balance of the left and right stereo channels and of the front and rear sound levels is also important.
Keep in mind that when listening to a stereo recording or broadcast, changing the right/left balance will increase the volume of one group of sounds while decreasing the volume of another.

Not for Reproduction

Audio screen adjustment

Settings are available for selecting the screen size and adjusting display.

Screen size settings

▶ iPod video/VTR

The screen size can be selected for each type of media.

1 Select “Options” on the control screen.

2 Select “Screen format” on the options screen.

① Display a 4 : 3 screen, with both sides in black.

② Enlarge the image horizontally and vertically to full screen.

③ Enlarge the image by the same ratio horizontally and vertically.

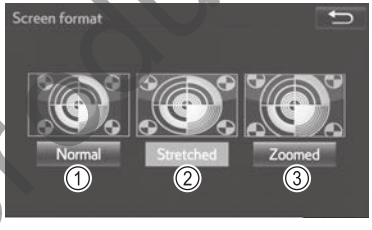

ME3005DIOM1

Not for Reproduction

Adjusting the audio screen

The brightness, contrast, color and tone of the screen can be adjusted.

1 Select “Options” on the control screen.

2 Select “Display” on the option screen.

3 Select the desired item to be adjusted.

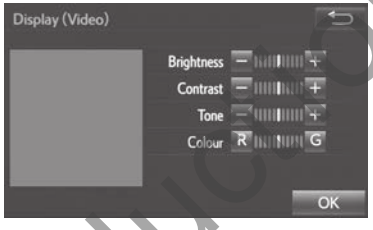

II50PK119aAU

	“-”	“+”
“Brightness”	Darker	Brighter
“Contrast”	Weaker	Stronger
“Tone”	Weaker	Stronger
	“R”	“G”
“Colour”	Red	Green

Not for Reproduction

Radio operation

Select “AM” or “FM” on the audio source selection screen to begin listening to the radio.

Control screen

Pressing the “AUDIO” button displays the audio control screen from any screens of the selected source.

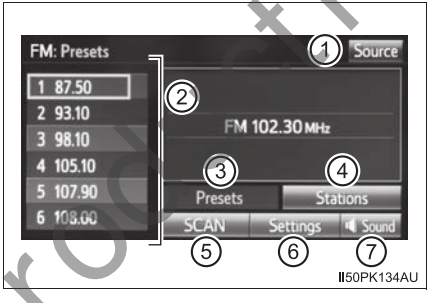

① Audio source selection screen appears

② Preset stations

③ Preset station screen appears

④ Station list screen appears

⑤ Select: Scanning for receivable stations. Select “SCAN” again to cancel.

Select and hold: Scanning preset stations. Select “SCAN” again to cancel.

⑥ Audio setting screen appears (→P. 272)

⑦ Setting the sound (→P. 281)

Selecting a station

Tune in to the desired station using one of the following methods.

■ **Seek tuning**

Press the “>” or “<” button on “TUNE•TRACK”.

The radio will begin seeking up or down for a station of the nearest frequency and will stop when a station is found.

Press and hold the “>” or “<” button on “TUNE•TRACK”.

The radio will begin seeking up or down available stations continuously.

■ **Preset stations**

Select the desired preset station.

Not for Reproduction

Setting station presets

Up to 6 preset stations can be registered in AM mode and up to 12 preset stations can be registered for FM radio mode.

1. Tune in the desired station.
2. Select one of the screen buttons (1-12) and hold it until a beep is heard. (Up to 6 preset stations can be registered in AM mode and up to 12 preset stations can be registered for FM radio mode.)
   - This sets the frequency to the screen button.
   - The station's frequency will be displayed in the screen button.
   - To change the preset station to a different one, follow the same procedure.

RDS (Radio Data System)

Depending on the availability of RDS infrastructure, the service may not function properly.

Reception sensitivity

- Maintaining perfect radio reception at all times is difficult due to the continually changing position of the antenna, differences in signal strength and surrounding objects, such as trains, transmitters, etc.
- Short pole type antenna:
  The radio antenna is mounted on the roof. The antenna can be removed from the base by turning it.
- The radio automatically changes to stereo reception when a stereo broadcast is received.
- If the signal becomes weak, the radio reduces the amount of channel separation to prevent the weak signal from creating noise. If the signal becomes extremely weak, the radio switches from stereo to mono reception.

NOTICE

To prevent damage

Remove the antenna in the following cases.

- The antenna will touch the ceiling of a garage.
- A cover will be put on the roof.
- When driving through an automatic car wash.
- Any other cases where there is a risk of touching surrounding parts.

Not for Reproduction

CD player operation

Insert a disc or select “DISC” on the audio source selection screen with a disc inserted to begin listening to a CD.

Control screen

Pressing the “AUDIO” button displays the audio control screen from any screens of the selected source.

▶ Audio CD

▶ MP3/WMA/AAC disc

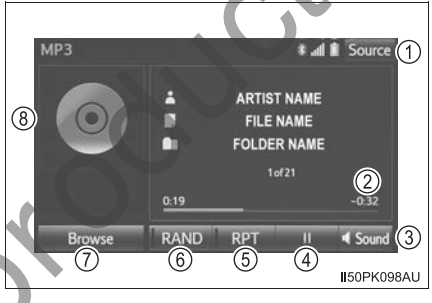

① Audio source selection screen appears

② Shows progress

③ Setting the sound (→P. 281)

④ Play/Pause

⑤ Repeat play (→P. 268)

⑥ Random playback (→P. 268)

⑦ Audio CD: Display a track list
MP3/WMA/AAC disc: Display a folder list
To return to the top screen, select “Now playing” on the list screen.

⑧ Displaying the track/file list

Not for Reproduction

■ CD-DA files

If a disc contains CD-DA files and MP3/WMA/AAC files, only the CD-DA files can be played back.

■ Displaying the title and artist name

If a CD-TEXT disc is inserted, the title of the disc and track will be displayed. Up to 32 characters can be displayed.

■ Error messages

If the following error messages appear on the screen, refer to the table and take the appropriate measures. If the problem is not rectified, take the vehicle to your Toyota dealer.

Message	Cause/Correction procedures
“Check DISC”	It indicates that the disc is dirty, damaged, or it was inserted upside down. Clean the disc or insert it correctly. It indicates a disc which is not playable is inserted.
“Region Code Error”	This indicates that the DVD region code is not set properly.
“DISC error”	There is a trouble inside the system. Eject the disc.

■ Discs that can be used

Discs with the marks shown below can be used.
Playback may not be possible depending on recording format or disc features, or due to scratches, dirt or deterioration.

CDs with copy-protection features may not play correctly.

■ CD player protection feature

To protect the internal components, playback is automatically stopped when a problem is detected.

■ If a disc is left inside the CD player or in the ejected position for extended periods

Disc may be damaged and may not play properly.

Not for Reproduction

Lens cleaners

Do not use lens cleaners. Doing so may damage the CD player.

MP3, WMA and AAC files

MP3 (MPEG Audio LAYER3) is a standard audio compression format.

Files can be compressed to approximately 1/10 of their original size by using MP3 compression.

WMA (Windows Media Audio) is a Microsoft audio compression format.

This format compresses audio data to a size smaller than that of the MP3 format.

AAC is short for Advanced Audio Coding and refers to an audio compression technology standard used with MPEG2 and MPEG4.

MP3, WMA and AAC file and media/formats compatibility are limited.

● MP3 file compatibility

- Compatible standards
  MP3 (MPEG1 LAYER3, MPEG2 LSF LAYER3)
- Compatible sampling frequencies
  MPEG1 LAYER3: 32, 44.1, 48 (kHz)
  MPEG2 LSF LAYER3: 16, 22.05, 24 (kHz)
- Compatible bit rates (compatible with VBR)
  MPEG1 LAYER3: 32-320 (kbps)
  MPEG2 LSF LAYER3: 8-160 (kbps)
- Compatible channel modes: stereo, joint stereo, dual channel and monaural

● WMA file compatibility

- Compatible standards
  WMA Ver. 7, 8, 9
- Compatible sampling frequencies
  32, 44.1, 48 (kHz)
- Compatible bit rates (only compatible with 2-channel playback)
  Ver. 7, 8: CBR 48-192 (kbps)
  Ver. 9: CBR 48-320 (kbps)

Not for Reproduction

● AAC file compatibility

- Compatible standards
  MPEG4/AAC-LC
- Compatible sampling frequencies
  11.025/12/16/22.05/24/32/44.1/48 (kHz)
- Compatible bit rates
  16-320 (kbps)

● Compatible media

Media that can be used for MP3, WMA and AAC playback are CD-Rs and CD-RWs.

Playback in some instances may not be possible if the CD-R or CD-RW is not finalized. Playback may not be possible or the audio may jump if the disc is scratched or marked with fingerprints.

● Compatible disc formats

The following disc formats can be used.

- Disc formats:
  CD-ROM Mode 1 and Mode 2
  CD-ROM XA Mode 2, Form 1 and Form 2
- File formats:
  ISO9660 Level 1, Level 2, (Romeo, Joliet)
  UDF (2.01 or lower)
  MP3, WMA and AAC files written in any format other than those listed above may not play correctly, and their file names and folder names may not be displayed correctly.

Items related to standards and limitations are as follows.

- Maximum directory hierarchy: 8 levels (including the root)
- Maximum length of folder names/file names: 32 characters
- Maximum number of folders: 192 (including the root)
- Maximum number of files per disc: 255

● File names

The only files that can be recognized as MP3/WMA/AAC and played are those with the extension .mp3, .wma or .m4a.

● Discs containing multi-session recordings

As the audio system is compatible with multi session discs, it is possible to play discs that contain MP3, WMA and AAC files. However, only the first session can be played.

Not for Reproduction

● ID3, WMA and AAC tags

ID3 tags can be added to MP3 files, making it possible to record the track title, artist name, etc.

The system is compatible with ID3 Ver. 1.0, 1.1, and Ver. 2.2, 2.3 ID3 tags. (The number of characters is based on ID3 Ver. 1.0 and 1.1.)

WMA tags can be added to WMA files, making it possible to record the track title and artist name in the same way as with ID3 tags.

AAC tags can be added to AAC files, making it possible to record the track title and artist name in the same way as with ID3 tags.

● MP3, WMA and AAC playback

When a disc containing MP3, WMA or AAC files is inserted, all files on the disc are first checked. Once the file check is finished, the first MP3, WMA or AAC file is played. To make the file check finish more quickly, we recommend you do not write any files to the disc other than MP3, WMA or AAC files or create any unnecessary folders.

Discs that contain a mixture of music data and MP3, WMA or AAC format data cannot be played.

● Extensions

If the file extensions .mp3, .wma and .m4a are used for files other than MP3, WMA and AAC files, they may be mistakenly recognized and played as MP3, WMA and AAC files. This may result in large amounts of interference and damage to the speakers.

● Playback

- To play MP3 files with steady sound quality, we recommend a fixed bit rate of at least 128 kbps and a sampling frequency of 44.1 kHz.
- CD-R or CD-RW playback may not be possible in some instances, depending on the characteristics of the disc.
- There is a wide variety of freeware and other encoding software for MP3, WMA and AAC files on the market, and depending on the status of the encoding and the file format, poor sound quality or noise at the start of playback may result. In some cases, playback may not be possible at all.
- When files other than MP3, WMA or AAC files are recorded on a disc, it may take more time to recognize the disc and in some cases, playback may not be possible at all.
- Microsoft, Windows, and Windows Media are the registered trademarks of Microsoft Corporation in the U.S.A. and other countries.

Not for Reproduction

NOTICE

■ **Discs and adapters that cannot be used**

Do not use the following types of CDs.

Also, do not use 8 cm (3 in.) CD adapters, DualDiscs or printable discs.

Doing so may damage the CD player and/or the CD insert/eject function.

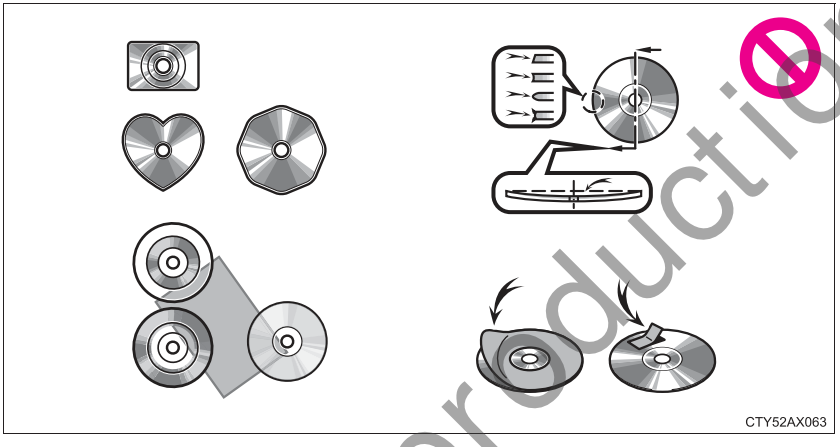

- Discs that have a diameter that is not 12 cm (4.7 in.).
- Low-quality or deformed discs.
- Discs with a transparent or translucent recording area.
- Discs that have tape, stickers or CD-R labels attached to them, or that have had the label peeled off.

■ **Player precautions**

Failure to follow the precautions below may result in damage to the discs or the player itself.

- Do not insert anything other than discs into the disc slot.
- Do not apply oil to the player.
- Store discs away from direct sunlight.
- Never try to disassemble any part of the player.

Not for Reproduction

iPod player operation

Select “iPod (DEVICE NAME)” on the audio source selection screen.

Connecting an iPod

→P. 265

Control screen

Pressing the “AUDIO” button displays the audio control screen from any screens of the selected source.

▶ iPod audio

▶ iPod video

① Audio source selection screen appears

② Shows progress

③ Setting the sound (→P. 281)

④ Play/pause

⑤ Repeat play (→P. 294)

⑥ Shuffle play (→P. 294)

⑦ Selecting the play mode (→P. 294)
To return to the top screen, select “Now playing” on the list screen.

⑧ Audio setting screen appears (→P. 272)

⑨ Displaying cover art
Displaying the track list
To return to the top screen, select “Now playing” on the list screen.

⑩ Option screen appears

⑪ Displaying full screen video

Not for Reproduction

Selecting a play mode

1 Select “Browse” on the screen.

2 Select the desired play mode by selecting the “Playlists”, “Artists”, “Albums”, “Songs”, “Podcasts”, “Audiobooks”, “Genres”, “Composers” or “Videos” tab. Then select a song to begin using the selected play mode.

Shuffle play

Each time is selected, the mode changes in the following order: track shuffle → album shuffle → off

Repeat play

Each time is selected, the mode changes in the following order: track repeat → off

iPod video options

To change to iPod video mode, select “Browse” on the iPod audio screen, then select the “Videos” tab and select the desired video file.

1 Select “Options”.

2 Select the desired setting to change.

① Display the image quality adjustment screen (→P. 284)

② Change audio settings (→P. 272)

③ Change screen size (→P. 283)

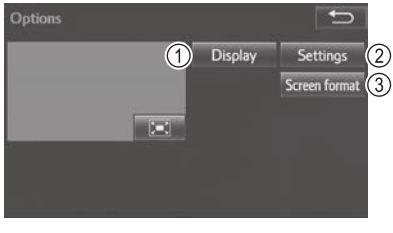

II50PK124AU

For viewing videos from an iPod, it is necessary to set “iPod Settings” to “A/V”. (→P. 273)

Not for Reproduction

■ About iPod

Made for iPod iPhone

- “Made for iPod” and “Made for iPhone” mean that an electronic accessory has been designed to connect specifically to iPod or iPhone, respectively, and has been certified by the developer to meet Apple performance standards.
- Apple is not responsible for the operation of this device or its compliance with safety and regulatory standards. Please note that the use of this accessory with iPod or iPhone may affect wireless performance.
- iPhone, iPod, iPod classic, iPod nano and iPod touch are trademarks of Apple Inc., registered in the U.S. and other countries.

■ iPod cover art

- Depending on the iPod and songs in the iPod, iPod cover art may be displayed.
- This function can be changed to on/off. (→P. 272)
- It may take time to display iPod cover art, and the iPod may not be operated while the cover art display is in process.

■ iPod functions

- When an iPod is connected and the audio source is changed to iPod mode, the iPod will resume play from the same point in which it was last used.
- Depending on the iPod that is connected to the system, certain functions may not be available. If a function is unavailable due to a malfunction (as opposed to a system specification), disconnecting the device and reconnecting it may resolve the problem.
- Depending on the iPod, while connected to the system, the iPod cannot be operated with its own controls. It is necessary to use the controls of the vehicle’s audio system instead.
- When the battery level of an iPod is very low, the iPod may not operate. If so, charge the iPod before use.
- Compatible models (→P. 297)

■ iPod problems

To resolve most problems encountered when using your iPod, disconnect your iPod from the vehicle iPod connection and reset it. For instructions on how to reset your iPod, refer to your iPod Owner’s Manual.

Not for Reproduction

Error messages

If the following error messages appear on the screen, refer to the following table and take the appropriate measures. If the problem is not rectified, take the vehicle to your Toyota dealer.

Message	Cause/Correction procedures
“iPod error”	This indicates a problem in the iPod or its connection.
“No music files found.”	This indicates that there is no music data in the iPod.
“No video files found.”	This indicates that no video files are included in the iPod.
“Please check the iPod firmware version.” (“Check the iPod firmware version.”)	This indicates that the software version is not compatible. Perform the iPod firmware updates and try again.
“iPod authorization unsuccessful.”/“iPod authorisation unsuccessful.”	This indicates that the multimedia system failed to authorize the iPod. Please check your iPod.

Not for Reproduction

Compatible models

The following iPod®, iPod nano®, iPod classic®, iPod touch® and iPhone® devices can be used with this system.

● Made for

- iPod touch (5th generation)*
- iPod touch (4th generation)
- iPod touch (3rd generation)
- iPod touch (2nd generation)
- iPod touch (1st generation)
- iPod classic
- iPod with video
- iPod nano (7th generation)*
- iPod nano (6th generation)
- iPod nano (5th generation)
- iPod nano (4th generation)
- iPod nano (3rd generation)
- iPod nano (2nd generation)
- iPod nano (1st generation)
- iPhone 5s*
- iPhone 5c*
- iPhone 5*
- iPhone 4S
- iPhone 4
- iPhone 3GS
- iPhone 3G
- iPhone

*: iPod video not supported

Depending on differences between models or software versions etc., some models might be incompatible with this system.

WARNING

While driving

Do not connect an iPod or operate the controls.

NOTICE

To prevent damage to the iPod or its terminals

● Do not leave the iPod in the vehicle. The temperature inside the vehicle may become high, resulting in damage to the iPod.

● Do not push down on or apply unnecessary pressure to the iPod while it is connected.

● Do not insert foreign objects into the port.

Not for Reproduction

USB memory device player operation

Touch “USB” on the audio source selection screen.

Connecting a USB memory device

→P. 265

Control screen

Pressing the “AUDIO” button displays the audio control screen from any screens of the selected source.

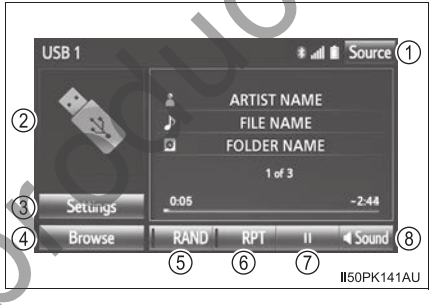

① Audio source selection screen appears

② Displaying the file/track list
Displaying cover art

③ Audio setting

④ Displaying the folder list

⑤ Random playback (→P. 268)

⑥ Repeat play (→P. 268)

⑦ Play/pause

⑧ Setting the sound (→P. 281)

■USB memory functions

- Depending on the USB memory device that is connected to the system, the device itself may not be operable and certain functions may not be available. If the device is inoperable or a function is unavailable due to a malfunction (as opposed to a system specification), disconnecting the device and reconnecting it may resolve the problem.
- If the USB memory device still does not begin operation after being disconnected and reconnected, format the memory.

Not for Reproduction

Error messages for USB memory

If the following error messages appear on the screen, refer to the table and take the appropriate measures. If the problem is not rectified, take the vehicle to your Toyota dealer.

Message	Cause/Correction procedures
“USB error.”	This indicates a problem with the USB memory device or its connection.
“No music files found.”	This indicates that no MP3/WMA/AAC files are included on the USB memory device.

USB memory

● Compatible devices

USB memory device that can be used for MP3, WMA and AAC playback.

● Compatible device formats

The following device format can be used:

- USB communication format: USB2.0 FS (12 Mbps)
- File system format: FAT16/32 (Windows)
- Correspondence class: Mass storage class
  MP3, WMA and AAC files written to a device with any format other than those listed above may not play correctly, and their file names and folder names may not be displayed correctly.

Items related to standards and limitations are as follows:

- Maximum directory hierarchy: 8 levels
- Maximum number of folders in a device: 3000 (including the root)
- Maximum number of files in a device: 9999
- Maximum number of files per folder: 255

● MP3, WMA and AAC files

MP3 (MPEG Audio LAYER 3) is a standard audio compression format. Files can be compressed to approximately 1/10 of their original size using MP3 compression.

WMA (Windows Media Audio) is a Microsoft audio compression format. This format compresses audio data to a size smaller than that of the MP3 format.

AAC is short for Advanced Audio Coding and refers to an audio compression technology standard used with MPEG2 and MPEG4.

MP3, WMA and AAC file and media/formats compatibility are limited.

Not for Reproduction

● MP3 file compatibility

- Compatible standards
  MP3 (MPEG1 AUDIO LAYERII, III, MPEG2 AUDIO LAYERII, III, MPEG2.5)
- Compatible sampling frequencies
  MPEG1 AUDIO LAYERII, III: 32, 44.1, 48 (kHz)
  MPEG2 AUDIO LAYERII, III: 16, 22.05, 24 (kHz)
- Compatible bit rates (compatible with VBR)
  MPEG1 AUDIO LAYERII, III: 32-320 (kbps)
  MPEG2 AUDIO LAYERII, III: 8-160 (kbps)
- Compatible channel modes: stereo, joint stereo, dual channel and monaural

● WMA file compatibility

- Compatible standards
  WMA Ver. 7, 8, 9
- Compatible sampling frequencies
  HIGH PROFILE 32, 44.1, 48 (kHz)
- Compatible bit rates
  HIGH PROFILE 48-320 (kbps, VBR)

● AAC file compatibility

- Compatible standards
  MPEG4/AAC-LC
- Compatible sampling frequencies
  11.025/12/16/22.05/24/32/44.1/48 (kHz)
- Compatible bit rates
  16-320 (kbps)
- Compatible channel modes: 1 ch and 2 ch

● File names

The only files that can be recognized as MP3/WMA/AAC and played are those with the extension .mp3 or .wma.

● ID3, WMA and AAC tags

ID3 tags can be added to MP3 files, making it possible to record the track title, artist name, etc.

The system is compatible with ID3 Ver. 1.0, 1.1, and Ver. 2.2, 2.3, 2.4 ID3 tags. (The number of characters is based on ID3 Ver. 1.0 and 1.1.)

WMA tags can be added to WMA files, making it possible to record the track title and artist name in the same way as with ID3 tags.

AAC tags can be added to AAC files, making it possible to record the track title and artist name in the same way as with ID3 tags.

Not for Reproduction

● MP3, WMA and AAC playback

- When a device containing MP3, WMA and AAC files is connected, all files in the USB memory device are checked. Once the file check is finished, the first MP3, WMA and AAC file is played. To make the file check finish more quickly, we recommend that you do not include any files other than MP3, WMA and AAC files or create any unnecessary folders.
- When a USB memory device is connected and the audio source is changed to USB memory mode, the USB memory device will start playing the first file in the first folder. If the same device is removed and reconnected (and the con- tents have not been changed), the USB memory device will resume play from the same point in which it was last used.

● Extensions

If the file extensions .mp3, .wma and .m4a are used for files other than MP3, WMA and AAC files, they will be skipped (not played).

● Playback

- To play MP3 files with steady sound quality, we recommend a fixed bit rate of at least 128 kbps and a sampling frequency of 44.1 kHz.
- There is a wide variety of freeware and other encoding software for MP3, WMA and AAC files on the market, and depending on the status of the encoding and the file format, poor sound quality or noise at the start of playback may result. In some cases, playback may not be possible at all.
- Microsoft, Windows, and Windows Media are the registered trademarks of Microsoft Corporation in the U.S.A. and other countries.

WARNING

■ **While driving**

Do not connect a USB memory device or operate the device controls.

NOTICE

■ **To prevent damage to the USB memory device or its terminals**

● Do not leave the USB memory device in the vehicle. The temperature inside the vehicle may become high, resulting in damage to the USB memory device.

● Do not push down on or apply unnecessary pressure to the USB memory device while it is connected.

● Do not insert foreign objects into the port.

Not for Reproduction

Using the AUX port

This port can be used to connect a portable audio device and listen to it through the vehicle's speakers.

Connecting a portable audio device

→P. 265

Control screen

Press the "AUDIO" button to display the audio control screen. Select "Source" and select "AUX".

① Audio source selection screen appears

② Setting the sound (→P. 281)

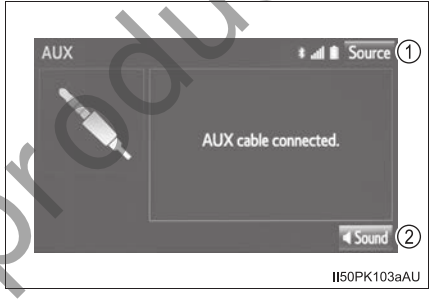

■ **Operating portable audio players connected to the audio system**

The volume can be adjusted using the vehicle's audio controls. All other adjustments must be made on the portable audio player itself.

■ **When using a portable audio player connected to the power outlet**

Noise may occur during playback. Use the power source of the portable audio player.

⚠ WARNING

■ **While driving**

Do not connect a portable audio player or operate the device controls.

Not for Reproduction

VTR

Control screen

Connect a device to the AUX port. (→P. 265)

Press the “AUDIO” button to display the audio control screen. Select “Source” and select “A/V”.

① Audio source selection screen appears

② Setting the sound (→P. 281)

③ Displaying full screen VTR

④ Options screen appears

II50PK123aAU

VTR options

1 Select “Options”.

2 Select the desired settings to change.

① Display the image quality adjustment screen (→P. 284)

② Change audio settings (→P. 272)

③ Change screen size (→P. 283)

II50PK124AU

Not for Reproduction

Preparations to use wireless communication

The following can be performed using Bluetooth® wireless communication:

- **A portable audio player can be operated and listened to via multimedia system**
- **Hands-free phone calls can be made via a cellular phone**

In order to use wireless communication, register and connect a Bluetooth® device by performing the following procedures.

Not for Reproduction

Device registration/connection flow

1. Register the Bluetooth® device to be used with multimedia system (→P. 307, 308, 310)

2. Select the Bluetooth® device to be used (→P. 312)

To be used for audio

3. Start Bluetooth® connection (→P. 312)

4. Check connection status (→P. 321)

5. Use Bluetooth® audio (→P. 320)

To be used for hands-free phone

3. Start Bluetooth® connection (→P. 312)

4. Check connection status (→P. 323)

5. Use Bluetooth® phone (→P. 322)

Not for Reproduction

Registering and connecting from the “Bluetooth* setup” screen

To display the screen shown below.

Press the “SETUP” button and select “Bluetooth*” on the “Setup” screen.

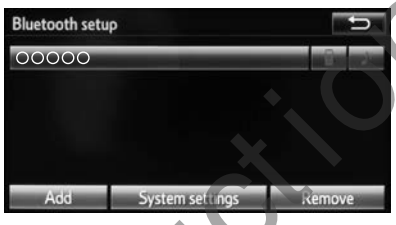

AU3030BICFOM

- Registering a Bluetooth® device (→P. 310)
- Deleting a Bluetooth® device (→P. 311)
- Connecting a Bluetooth® device (→P. 312)
- Editing the Bluetooth® device information (→P. 315)
- Bluetooth® system settings (→P. 317)

*: The Bluetooth® word mark and logos are registered trademarks owned by Bluetooth SIG, Inc.

■Displaying the “Bluetooth* setup” screen in a different way

1. Press the “SETUP” button.
2. Select “Telephone”.
3. Select “Connect telephone”.

*: The Bluetooth® word mark and logos are registered trademarks owned by Bluetooth SIG, Inc.

Not for Reproduction

Registering a Bluetooth® audio player for the first time

To use the Bluetooth® Audio, it is necessary to register an audio player with the system.

Once the player has been registered, it is possible to use the Bluetooth® Audio.

This operation cannot be performed while driving.

For details about registering a Bluetooth® device. (→P. 310)

1. Turn the Bluetooth® connection setting of your audio player on.

   This function is not available when the Bluetooth® connection setting of your audio player is set to off.
2. Press the “AUDIO” button.
3. Select “Source”.
4. Select “Bluetooth* audio”.
5. Select “Connect”.

   Depending on the type of the multimedia system, it may be necessary to perform additional steps.
6. Follow the steps in “How to registering a Bluetooth® device” from step 2. (→P. 310)

*: The Bluetooth® word mark and logos are registered trademarks owned by Bluetooth SIG, Inc.

Not for Reproduction

Registering a Bluetooth® phone for the first time

To use the hands-free system, it is necessary to register a Bluetooth® phone with the system.

Once the telephone has been registered, it is possible to use the hands-free system.

This operation cannot be performed while driving.

For details about registering a Bluetooth® device. (→P. 310)

1. Turn the Bluetooth® connection setting of your cellular phone on.

   This function is not available when the Bluetooth® connection setting of your audio player is set to off.

2. Press the button.

   Operations up to this point can also be performed by pressing on the steering wheel.

3. Select “Yes” to register a telephone.

4. When this screen is displayed, search for the device name displayed on this screen on the screen of your Bluetooth® device.

   For details about operating the Bluetooth® device, see the manual that comes with it.

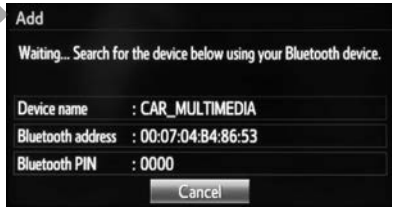

AU3002BICFOM

   To cancel the registration, select “Cancel”.

Not for Reproduction

5 Register your Bluetooth® device on the Bluetooth® system.

A PIN-code is not required for SSP (Secure Simple Pairing) compatible Bluetooth® devices. Depending on the type of Bluetooth® device being connected, a message confirming registration may be displayed on the Bluetooth® device's screen. Respond and operate the Bluetooth® device according to the confirmation message.

6 Check that the following screen is displayed when registration is complete.

The system waits for connection requests coming from the registered device.

At this stage, the Bluetooth® functions are not yet available.

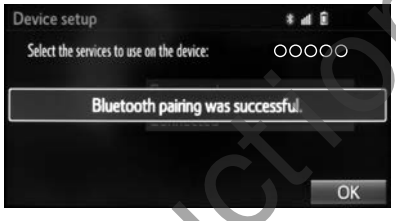

AU3003BICFOM

7 Select "OK" when the connection status changes from "Connection waiting..." to "Connected".

If an error message is displayed, follow the guidance on the screen to try again.

Not for Reproduction

Registering a Bluetooth® device

Up to 5 Bluetooth® devices can be registered.

Bluetooth® compatible phones (HFP) and audio players (AVP) can be registered simultaneously.

This operation cannot be performed while driving.

How to register a Bluetooth® device

1 Display the “Bluetooth* setup” screen. (→P. 306)

*: The Bluetooth® word mark and logos are registered trademarks owned by Bluetooth SIG, Inc.

2 Select “Add”.

When another Bluetooth® device is connected:
To disconnect the Bluetooth® device, select “Yes”.

When 5 Bluetooth® devices have already been registered:
A registered device needs to be replaced. Select “Yes”, and select the device to be replaced.

AU3030BICFOM

3 When this screen is displayed, search for the device name displayed on this screen on the screen of your Bluetooth® device.

For details about operating the Bluetooth® device, see the manual that comes with it.

To cancel the registration, select “Cancel”.

AU3002BICFOM

4 Follow the steps in “Registering a Bluetooth® phone for the first time” from step 5. (→P. 309)

■While driving

The function “Registering a Bluetooth® device” is unavailable.

Not for Reproduction

Removing a Bluetooth® device

1 Display the “Bluetooth* setup” screen. (→P. 306)

2 Select “Remove”.

AU3030BICFOM

3 Select the desired device.

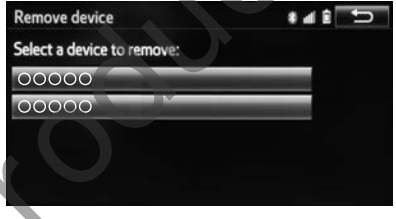

AU3004BICFOM

4 Select “Yes” when the confirmation screen appears.

5 Check that a confirmation screen is displayed when the operation is complete.

*: The Bluetooth® word mark and logos are registered trademarks owned by Bluetooth SIG, Inc.

■When deleting a Bluetooth® phone

The contact data will be deleted at the same time.

Not for Reproduction

Connecting a Bluetooth® device

Up to 5 Bluetooth® devices (Telephones (HFP) and audio players (AVP)) can be registered.

If more than 1 Bluetooth® device has been registered, select which device to connect to.

How to select a Bluetooth® device

1 Display the “Bluetooth* setup” screen. (→P. 306)

2 Select the device to be connected.

Supported profile icons will be displayed.

: Telephone

: Audio player

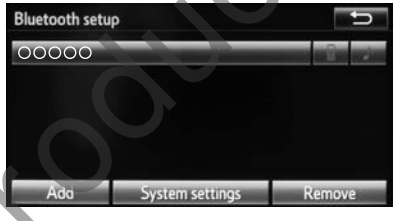

AU3030BICFOM

Supported profile icons for currently connected devices will illuminate.

Dimmed icons can be selected to connect to the function directly.

If the desired Bluetooth® device is not on the list, select “Add” to register the device. (→P. 306)

*: The Bluetooth® word mark and logos are registered trademarks owned by Bluetooth SIG, Inc.

3 Select the desired connection.

Supported profile icons will be displayed.

① Telephone

② Audio player

When another Bluetooth® device is connected: To disconnect the Bluetooth® device, select “Yes”.

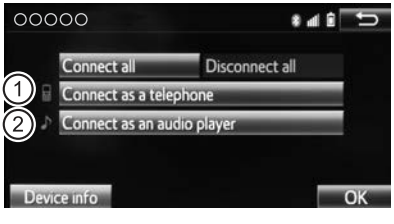

AU3005BICFOM

Not for Reproduction

4 Check that a confirmation screen is displayed when the operation is complete.

If an error message is displayed, follow the guidance on the screen to try again.

Depending on the type of Bluetooth® device being connected, it may be necessary to perform additional steps on the device.

■ **When connecting from the Bluetooth® audio control screen**

▶ Registering an additional device

Select “Connect” on the Bluetooth® audio control screen.

For more information: →P. 310

▶ Selecting a registered device

Select “Connect” on the Bluetooth® audio control screen.

For more information: →P. 312

Auto connection

Make sure that “Bluetooth* power” is turned on. (→P. 317)

When you register a Bluetooth® device, auto connection will be activated. Always use this mode and leave the Bluetooth® device in a place where a connection can be established.

▶ Vehicles without smart entry & start system

When the engine switch is turned to the “ACC” or “ON” position, the system will search for a nearby Bluetooth® device you have registered.

▶ Vehicles with smart entry & start system

When the engine switch is turned to ACCESSORY or IGNITION ON mode, the system will search for a nearby Bluetooth® device you have registered.

Next, the system automatically connects with the most recent of the telephones connected to in the past.

*: The Bluetooth® word mark and logos are registered trademarks owned by Bluetooth SIG, Inc.

Not for Reproduction

Manual connection

When auto connection has failed or “Bluetooth* power” is turned off, you must connect the Bluetooth® device manually.

1. Press the “SETUP” button.
2. Select “Bluetooth*”.
3. Follow the steps in “How to select a Bluetooth® device” from step 2. (→P. 312)

*: The Bluetooth® word mark and logos are registered trademarks owned by Bluetooth SIG, Inc.

Reconnecting a Bluetooth® phone

▶ Vehicles without smart entry & start system

If the system cannot connect due to poor signal strength with the engine switch in the “ACC” or “ON” position, the system will automatically attempt to reconnect.

▶ Vehicles with smart entry & start system

If the system cannot connect due to poor signal strength with the engine switch in ACCESSORY or IGNITION ON mode, the system will automatically attempt to reconnect.

If the telephone is turned off, the system will not attempt to reconnect. In this case, the connection must be made manually, or the telephone must be reselected.

Connecting a portable audio player

It may take time if the device connection is carried out during portable audio player playback.

Not for Reproduction

Displaying a Bluetooth® device details

You can confirm and change the registered device details.

Bluetooth® device registration status

1 Display the “Bluetooth* setup” screen. (→P. 306)

*: The Bluetooth® word mark and logos are registered trademarks owned by Bluetooth SIG, Inc.

2 Select the device.

3 Select “Device info”.

4 Following screen is displayed:

① Device name (→P. 316)

② Setting the portable audio player connection method (→P. 316)

③ Device address

It cannot be changed.

④ Display your telephone number

⑤ Compatibility profile of the device

⑥ Restore default settings

Depending on the type of telephone, some information may not be displayed.

Not for Reproduction

Changing a device name

1 Select “Device name”.

2 Enter the name and select “OK”.

Even if the device name is changed, the name registered in your Bluetooth® device does not change.

Setting audio player connection method

1 Select “Connect audio player from”.

2 Select the desired connection method.

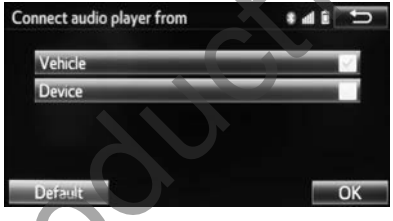

AU3007BICFOM

“Vehicle”: Select to connect the audio system to the audio player.

“Device”: Select to connect the audio player to the audio system.

Depending on the audio player, the “Vehicle” or “Device” connection method may be best. As such, refer to the manual that comes with the audio player.

To reset the connection method, select “Default”.

■When 2 Bluetooth® devices have been registered with the same device name

The devices can be distinguished referring to the device’ address.

Not for Reproduction

Detailed Bluetooth® settings

You can confirm and change the detailed Bluetooth® settings.

How to check and change detailed Bluetooth® settings

1. Display the “Bluetooth* setup” screen. (→P. 306)
2. Select “System settings”.
3. Select the desired item to be set.

① Setting Bluetooth® connection on/off (→P. 318)

② System name (→P. 318)

③ Changing PIN-code (→P. 318)

④ System address
It cannot be changed.

⑤ Setting the telephone connection status display on/off

⑥ Setting the connection status display of the audio player on/off

⑦ Compatibility profile of the Bluetooth® device

⑧ Resetting all setup items

*: The Bluetooth® word mark and logos are registered trademarks owned by Bluetooth SIG, Inc.

Not for Reproduction

Changing “Bluetooth* power”

Select “Bluetooth* power”.

▶ Vehicles without smart entry & start system

When “Bluetooth* power” is on: The Bluetooth® device is automatically connected when the engine switch is turned to the “ACC” or “ON” position.

▶ Vehicles with smart entry & start system

When “Bluetooth* power” is on: The Bluetooth® device is automatically connected when the engine switch is turned to ACCESSORY or IGNITION ON mode.

When “Bluetooth* power” is off: The Bluetooth® device is disconnected, and the system will not connect to it next time.

*: The Bluetooth® word mark and logos are registered trademarks owned by Bluetooth SIG, Inc.

Editing the system name

1 Select “Bluetooth* name”.

2 Enter a name and select “OK”.

*: The Bluetooth® word mark and logos are registered trademarks owned by Bluetooth SIG, Inc.

Editing the PIN-code

1 Select “Bluetooth* PIN”.

2 Enter a PIN-code and select “OK”.

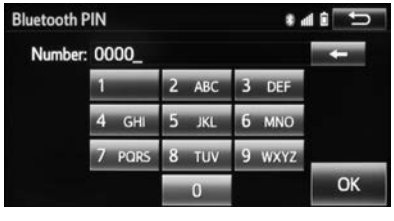

AU3009BICFOM

*: The Bluetooth® word mark and logos are registered trademarks owned by Bluetooth SIG, Inc.

Not for Reproduction

■ **While driving**

You cannot change the state of “Bluetooth* power” from on to off while driving, but it can be changed from off to on.

*: The Bluetooth® word mark and logos are registered trademarks owned by Bluetooth SIG, Inc.

Not for Reproduction

Listening to Bluetooth® audio

The Bluetooth® audio system enables the user to enjoy music played on a portable player from the vehicle speakers via wireless communication.

When a Bluetooth® device cannot be connected, check the connection status on the Bluetooth® audio control screen. If the device is not connected, either register or reconnect the device. (→P. 312)

Audio control screen

Press the “AUDIO” button to display the audio control screen. Select “Source” and select “Bluetooth* audio”.

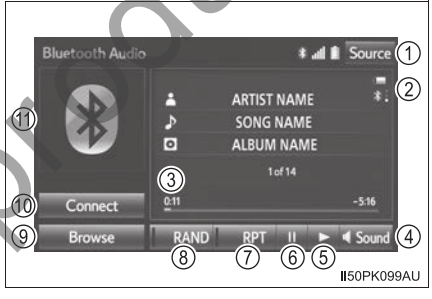

① Audio source selection screen appears

② Status display (→P. 321)

③ Shows progress

④ Setting the sound (→P. 281)

⑤ Playback

⑥ Pause

⑦ Repeat play (→P. 268)

⑧ Random play (→P. 268)

⑨ Displaying the playlist

To return to the top screen, select “Now playing” on the list screen.

⑩ Connecting a Bluetooth® audio player (→P. 308, 313)

⑪ Displaying the track list

To return to the top screen, select “Now playing” on the list screen.

Depending on the type of portable player connected, some functions may not be available and/or the screen may look differently than shown in this manual.

*: The Bluetooth® word mark and logos are registered trademarks owned by Bluetooth SIG, Inc.

Not for Reproduction

Status display

You can check indicators of connection status and battery charge on the screen.

① Battery charge

The battery charge indicator may not be displayed depending on the connected device.

② Connection status

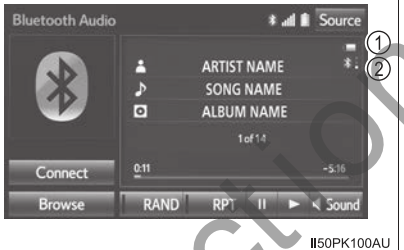

II50PK100AU

Indicators	Conditions
Connection status	Good ⟷ Not connected
Battery charge	Full ⟷ Empty

■Connecting portable player

Depending on the Bluetooth® device that is connected to the system, the music may start playing when selecting ⏸ while it is paused. Conversely, the music may pause when selecting ▶ while it is playing.

Not for Reproduction

Using a Bluetooth® Phone

The hands-free system is a function that allows you to use your cellular phone without touching it.

This system supports Bluetooth®. Bluetooth® is a wireless data system that allows the cellular phone to wirelessly connect to the hands-free system and make/receive calls.

Before making a telephone call, check the connection status, battery charge, call area and signal strength. (→P. 323)

If a Bluetooth® device cannot be connected, check the connection status on the telephone top screen. If the device is not connected, either register or reconnect it. (→P. 310, 312)

Telephone top screen

To display the hands-free operation screen shown below, press the switch on the steering wheel or the button.

Several functions are available to operate on each screen that is displayed by selecting the 4 tabs.

① Device name

② Bluetooth® connection status

③ Select to make a call

④ Select to use the telephone message function (→P. 333)

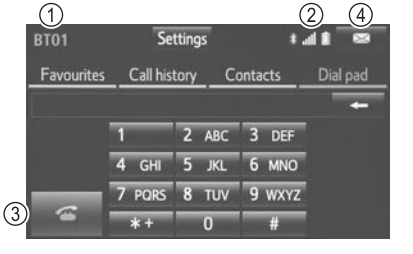

AU3001DIIFOM

■ Telephone switches

→P. 337

Not for Reproduction

■ Microphone

The vehicle's built in microphone is used when talking on the telephone. The person you are speaking to can be heard from the front speakers.

To use the hands-free system, you must register your Bluetooth® phone in the system. (→P. 310)

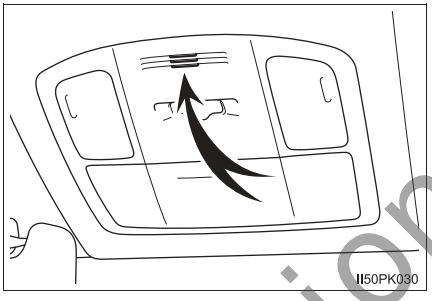

Status display

You can check indicators such as signal strength and battery charge on the telephone top screen.

① Connection status
② Signal strength
③ Battery charge

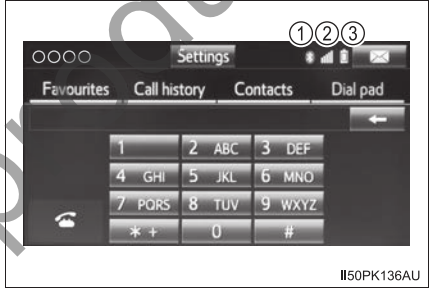

Indicators	Conditions
Connection status	Good (Blue) ⟷ Poor (Gray) ⟷ Not connected
Signal strength	Excellent ⟷ Poor "RM" is displayed when receiving in a roaming area. While roaming, display "RM" top-left on the icon.
Battery charge	Full ⟷ Empty

Not for Reproduction

Making a call

Once a Bluetooth® phone is registered, you can make a call using the following procedure:

Dialing

1 Display the telephone top screen. (→P. 322)

2 Select the “Dial pad” tab and enter a telephone number.

To delete the input telephone number, select ⬅.
For the first digit, you can enter “+” by selecting “*” for a while.

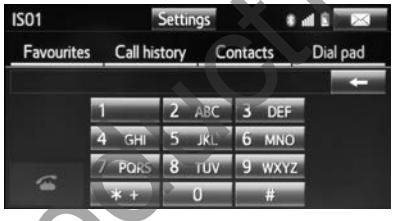

AU3013BICFOM

3 Press the 📞 switch on the steering wheel or select ☎.

4 Check that the “Call” screen is displayed.

Depending on the type of Bluetooth® phone being connected, it may be necessary to perform additional steps on the telephone.

Dialing from the contacts list

Calls can be made by using contact data which is transferred from a registered cellular phone. (→P. 325)

Up to 2500 contacts (maximum of 4 telephone numbers and e-mail addresses per contact) can be registered in the contact list.

1 Display the telephone top screen. (→P. 322)

2 Select “Contacts” tab and select the desired contact.

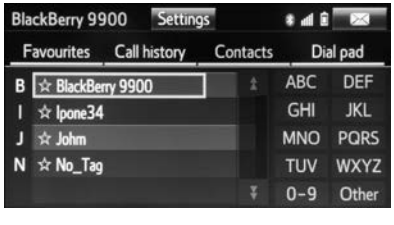

AU3014BICFOM

Not for Reproduction

3 Select the desired number and then check that the “Call” screen is displayed.

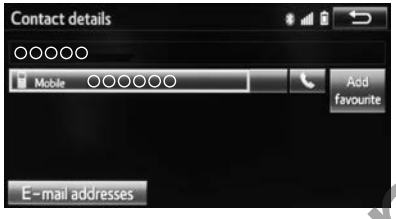

AU3015BICFOM

When the contact is empty

If your cellular phone is neither PBAP (Phone Book Access Profile) nor OPP (Object Push Profile) compatible, the contacts cannot be transferred.

Depending on the type of Bluetooth® phone:

- It may be necessary to perform additional steps on the telephone when transferring contact data.
- The registered image in the contact list may not transfer depending on the type of Bluetooth® phone connected.

■ For PBAP compatible Bluetooth® phones when “Automatic contact/history transfer” is set to on (→P. 340)

Contacts are transferred automatically.

■ For PBAP compatible Bluetooth® phones when “Automatic contact/history transfer” is set to off (→P. 340)

1 Display the telephone top screen. (→P. 322)

2 Select the desired item and then check that a confirmation screen is displayed when the operation is complete.

① Always transfer all the contacts from a connected cellular phone automatically.

② Transfer all the contacts from a connected cellular phone only once.

③ Cancel transferring.

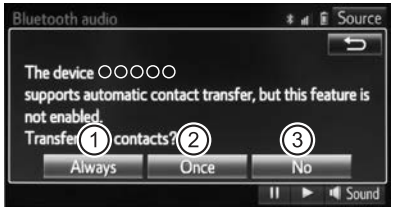

AU3016BICFOM

Not for Reproduction

■ **For a PBAP incompatible but OPP compatible Bluetooth® phone**

1 Display the telephone top screen. (→P. 322)

2 Select the desired item.

① Transfer the contacts from the connected cellular phone.

② Select to add a new contact manually.

③ Cancel transferring.

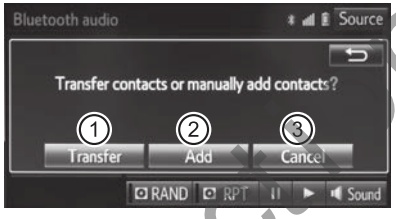

AU3017BICFOMa

▶ When “Transfer” is selected

3 Follow the steps in “For PBAP incompatible but OPP compatible Bluetooth® phones” from step 3. (→P. 342)

▶ When “Add” is selected

3 Follow the steps in “Registering a new contact to the contact list” from step 3. (→P. 343)

Not for Reproduction

Dialing from favourites

You can make a call using numbers registered in the favourites. (→P. 345)

1 Display the telephone top screen. (→P. 322)

2 Select “Favourites” tab on the telephone top screen and select the desired contact.

3 Select the desired number and then check that the “Call” screen is displayed.

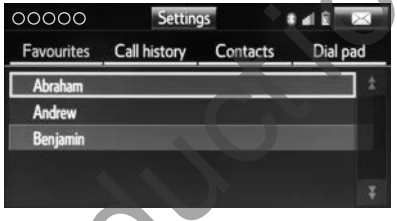

AU3018BICFOM

Dialing from call history

Up to 30 of the latest call history items (missed, incoming and outgoing) can be selected from the “Call history” tab.

1 Display the telephone top screen. (→P. 322)

2 Select “Call History” tab and select or the desired entry from the list.

The icons of call type are displayed.

: Missed call

: Incoming call

: Outgoing call

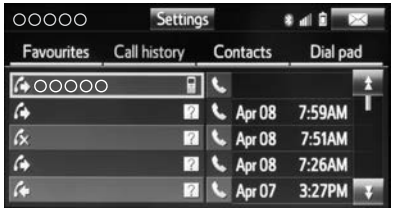

AU3019BICFOM

▶ When is selected

3 Check that the “Call” screen is displayed.

▶ When the desired contact is selected

3 Select the desired number and then check that the “Call” screen is displayed.

Not for Reproduction

■ **Call history list**

- If you make a call to or receive a call from a number registered in the contact, the name is displayed in the call history.
- If you make multiple calls to the same number, only the last call made is displayed in the call history.
- The list should group together consecutive entries with the same telephone number and same call type. For example, two calls from Sean John's mobile would be displayed as follows: John (2)
- Number-withheld calls are also memorized in the system.

■ **When driving**

The functions "Dialing", "Dialing from contact list", "When the contact is empty" are unavailable.

■ **International calls**

You may not be able to make international calls, depending on the mobile phone in use.

Not for Reproduction

Receiving a call

When a call is received, the following screen is displayed together with a sound.

To answer the telephone

- Press the switch on the steering wheel.
- Select .

  The incoming call display mode can be set. (→P. 349)

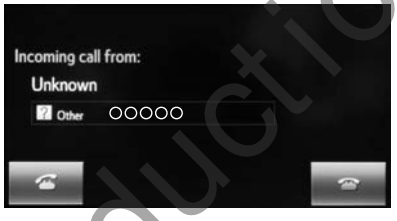

AU3028BICFOM

To refuse a call

Press the switch on the steering wheel or select .

To adjust the incoming call volume

Press the “VOL +” or “VOL -” button. You can also adjust the volume using the steering switches.

International calls

The other party’s name or number may not be displayed correctly depending on the type of cellular phone you have.

Incoming call

The ringtone that has been set in the “Sound settings” screen sounds when there is an incoming call. (→P. 339)

Depending on the type of Bluetooth® phone, both the multimedia system and Bluetooth® phone may sound simultaneously when there is an incoming call.

Not for Reproduction

Speaking on the telephone

The following screen is displayed when speaking on the telephone.

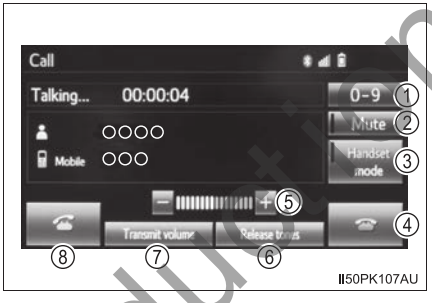

① Displaying the dial pad to send tones (→P. 330)

② Muting your voice to the other party

③ Changing handset modes between hands-free and cellular phone

④ Hanging up the telephone

⑤ Select “+” or “-” to adjust the volume of the other party’s voice

⑥ Sending tones. This button only appears when a number that contains a (w) is dialed in hands-free mode (→P. 331)

⑦ Select to adjust your voice volume that the other party hears from their speaker (→P. 331)

⑧ Talking with the other party

Inputting tones

■ By dial pad

1 Select “0-9”.

2 Input the number.

Not for Reproduction

■ **By selecting “Release tones”**

“Release tones” appear when a continuous tone signal(s) containing a (w) is registered in the contact list. This operation can be performed while driving.

Select “Release tones”.

Transmit volume setting

1. Select “Transmit volume”.
2. Select the desired level for the transmit volume.

   To reset the transmit volume, select “Default”.
3. Select “OK”.

Call waiting

When a call is interrupted by a third party while talking, this screen is displayed.

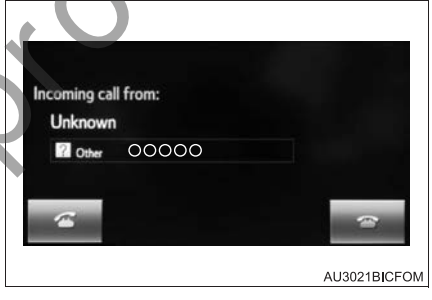

To talk with the other party:

- Press the switch on the steering wheel.
- Select .

To refuse the call:

- Press the switch on the steering wheel.
- Select .

Every time you press the switch on the steering wheel or select during call waiting, you will be switched to the other party.

This function may not be available depending on the type of cellular phone.

Not for Reproduction

■ **While driving**

The function “By dial pad” is unavailable.

■ **Release tones**

- A continuous tone signal is a character string that consists of numbers and the characters “p” or “w”. (e.g.056133w0123p#1∗)
- When the “p” pause tone is used, the tone data up until the next pause tone will be automatically sent after 2 seconds have elapsed. When the “w” pause tone is used, the tone data up until the next pause tone will be automatically sent after a user operation is performed.
- Release tones can be used when automated operation of a telephone based service such as an answering machine or bank telephone service is desired. A telephone number with continuous tone signals can be registered in the contact list.
- Tone data after a “w” pause tone can be operated on voice command during a call.

■ **Transferring calls**

- It is not possible to transfer from hands-free to the cellular phone while driving.
- If you transfer from the cellular phone to hands-free, the hands-free screen will be displayed, and you can operate the system using the screen.
- Changing between cellular phone call and hands-free call can be performed by operating the cellular phone directly.
- Transfer method and operation may vary according to the cellular phone used.
- For operation of the cellular phone in use, see the telephone’s manual.

■ **Transmit volume setting**

- The sound quality of the voice heard from the other party’s speaker may be negatively impacted.
- “Transmit volume” is dimmed when mute is on.

■ **Call waiting operation**

Call waiting operation may differ depending on your telephone company and cellular phone.

Not for Reproduction

Bluetooth® phone message function

Received messages can be forwarded from the connected Bluetooth® phone, enabling checking and replying using the multimedia system.

Depending on the type of Bluetooth® phone connected, received messages may not be transferred to the message inbox.

If the telephone does not support the message function, this function cannot be used.

Depending on the type of the telephone, even if it supports the message function, forwarding messages may not be possible without changing settings on the telephone itself.

1. Press the “SETUP” button.
2. Select “Telephone”.
3. Select ✉ and check that the “Message inbox” screen is displayed.
   - Receiving a message (→P. 333)
   - Checking messages (→P. 334)
   - Replying to a message (quick reply) (→P. 335)
   - Calling the message sender (→P. 336)
   - Message settings (→P. 348)

Receiving a message

When an e-mail/SMS/MMS is received, the incoming message screen pops up with sound and is ready to be operated on the screen.

① Select to check the message.

② Select to not open the message.

③ Select to call the message sender.

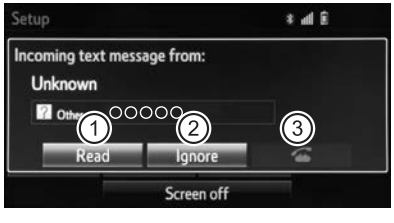

AU3022BICFOM

Not for Reproduction

■ **Receiving a message**

- Depending on the cellular phone used for receiving messages, or its registration status with the multimedia system, some information may not be displayed.
- The pop up screen is separately available for incoming e-mail and SMS/MMS messages under the following conditions:

  E-mail:
  - “Incoming e-mail display” is set to “Full screen”. (→P. 348)
  - “E-mail notification popup” is set to on. (→P. 348)

  SMS/MMS:
  - “Incoming SMS/MMS display” is set to “Full screen”. (→P. 348)
  - “SMS/MMS notification popup” is set to on. (→P. 348)

Checking the messages

1. Display the “Message inbox” screen. (→P. 333)
2. Select the desired message from the list.
3. Check that the message is displayed.

II50PK137AU

① E-mails: Select “Mark unread” or “Mark read” to mark mail unread or read on the message inbox screen.

This function is available when “Update message read status on telephone” is set to on (→P. 348)

Depending on the type of Bluetooth® phone being connected, it may be necessary to perform additional steps on the telephone.

② Select to make a call to the sender.

③ Select to have messages read out.
To cancel this function, select “Stop”.
When “Automatic message readout” is set to on, messages will be automatically read out. (→P. 348)

④ Select to display the previous or next message.

⑤ Select to reply the message. (→P. 335)

Not for Reproduction

■ **While driving**

The text of the message is not displayed.

■ **Check the messages**

- Messages are displayed in the appropriate connected Bluetooth® phone's registered mail address folder.
  Select the tab of the desired folder to be displayed.
- Only received messages on the connected Bluetooth® phone can be displayed.
- Press the "VOL +" or "VOL -" button, or use the volume control switch on the steering wheel to adjust the message read out volume.

Replying to a message (quick reply)

15 messages have already been stored.

1. Display the "Message inbox" screen. (→P. 333)
2. Select the desired message from the list.
3. Select "Quick message".
4. Select the desired message.
5. Select "Send".
   While the message is being sent, a sending message screen is displayed.
   To cancel sending the message, select "Cancel".

■ **Editing quick reply message**

1. Display the "Message inbox" screen. (→P. 333)
2. Select the desired message from the list.
3. Select "Quick message".
4. Select corresponding to the desired message to edit.
   To reset the edit quick reply messages, select "Default".
5. Select "OK" when editing is completed.

■ **While driving**

The function "Editing quick reply messages" is unavailable.

Not for Reproduction

Calling the message sender

Calls can be made to an e-mail/SMS/MMS message sender's telephone number.

■ Calling from e-mail/SMS/MMS message display

1. Display the "Message inbox" screen. (→P. 333)
2. Select the desired message.
3. Select .

   If there are 2 or more telephone numbers, select the desired number.
4. Check that the "Call" screen is displayed.

■ Calling from the incoming message screen

→P. 331

Calling from a number within a message

Calls can be made to a number identified in a message's text area.

1. Display the "Message inbox" screen. (→P. 333)
2. Select the desired message.
3. Select the text area.
4. Select the desired number.

   Identified telephone numbers contained in the message are displayed.
5. Select .
6. Check that the "Call" screen is displayed.

■ While driving

The function "Calling from a number within a message" is unavailable.

■ Calling from a number within a message

A series of numbers may be recognized as a telephone number. Additionally, some telephone numbers may not be recognized, such as those for other countries.

Not for Reproduction

Using the steering wheel switches

The steering wheel switches can be used to operate a connected cellular phone.

Operating a telephone using the steering wheel switches

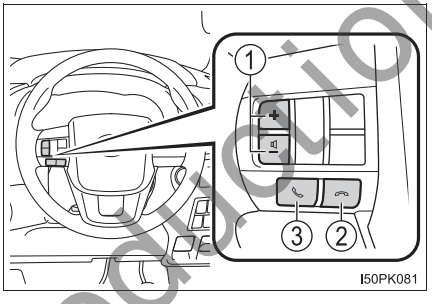

① Volume switch
- Increase/Decrease the volume
- Press and hold: Continuously increase/decrease the volume

② On hook switch
- End a call
- Refuse a call

③ Off hook switch
- Make a call
- Receive a call
- Display “Telephone” screen

Not for Reproduction

Bluetooth® phone settings

You can adjust the hands-free system to your desired settings.

“Telephone/message settings” screen

To display the screen shown below, press the “SETUP” button, and select “Telephone” on the “Setup” screen.

① Registering/connecting a telephone (→P. 306)

② Sound settings (→P. 339)

③ Contact/call history settings (→P. 340)

④ Messaging settings (→P. 348)

⑤ Telephone display settings (→P. 349)

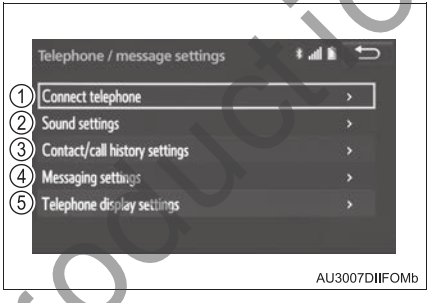

Not for Reproduction

Sound setting

1 Display the “Telephone/message settings” screen. (→P. 338)

2 Select “Sound settings”.

3 Select the desired item to be set.

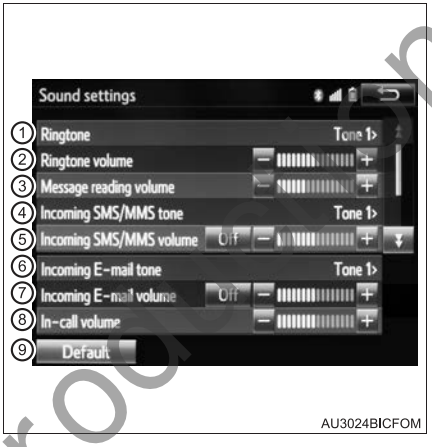

① Setting the desired ringtone.

② Select “-” or “+” to adjust the ringtone volume.

③ Select “-” or “+” to adjust the message readout volume.

④ Select to set the desired incoming SMS/MMS tone.

⑤ Select “-” or “+” to adjust the incoming SMS/MMS tone volume.

⑥ Select to set the incoming e-mail tone.

⑦ Select “-” or “+” to adjust the incoming e-mail tone volume.

⑧ Select “-” or “+” to adjust the default volume of the other party’s voice.

⑨ Resetting all setup items.

Depending on the type of telephone, certain functions may not be available.

■Displaying the “Telephone/message settings” screen in a different way

1 Display the telephone top screen. (→P. 322)

2 Select “Settings”

Not for Reproduction

Contact/call history settings

The contact can be transferred from a Bluetooth® phone to the system. The contact also can be added, edited and deleted.

The call history can be deleted and contact and favourites can be changed.

Depending on the type of telephone, certain functions may not be available.

"Contact/call history settings" screen

1 Display the "Telephone/message settings" screen (→P. 338).

2 Select "Contact/call history settings".

3 Select the desired item to be set.

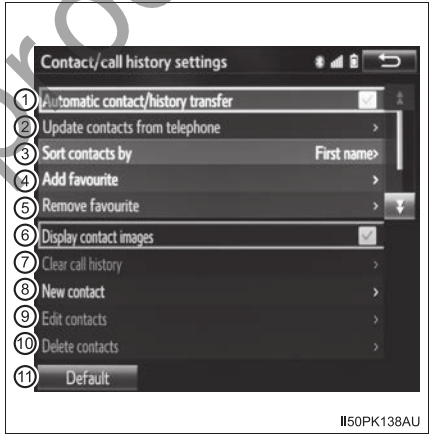

II50PK138AU

① For PBAP compatible Bluetooth® phones, select to set automatic contact/history transfer on/off. When set to on, the telephone's contact data and history are automatically transferred.

② Update contacts from the connected telephone. (→P. 341)

③ Sort contacts by the first name or last name field.

④ Adding contacts to the favourites list. (→P. 345)

⑤ Deleting contacts from the favourites list. (→P. 347)

⑥ Setting the transferred contact image display on/off.

Not for Reproduction

⑦ Clearing contacts from the call history.*

⑧ Adding new contacts to the contact list.* (→P. 343)

⑨ Editing contacts in the contact list.* (→P. 343)

⑩ Deleting contacts from the contact list.* (→P. 344)

⑪ Resetting all setup items.

Depending on the type of telephone, certain functions may not be available.

*: For PBAP compatible Bluetooth® phones only, this function is available when “Automatic Contact/History Transfer” is set to off.

■ **Contact data**

Contact data is managed independently for every registered telephone. When one telephone is connected, another telephone’s registered data cannot be read.

Update contacts from telephone

Operation methods differ between PBAP compatible and PBAP incompatible but OPP compatible Bluetooth® phones.

If your cellular phone is neither PBAP nor OPP compatible, the contacts cannot be transferred.

■ For PBAP compatible Bluetooth® Phones

1. Display “Contact/call history settings” screen. (→P. 340)
2. Select “Update contacts from telephone”.

   Contacts are transferred automatically.
3. Check that a confirmation screen is displayed when the operation is complete.

   This operation may be unnecessary depending on the type of cellular phone.

   Depending on the type of cellular phone, OBEX authentication may be required when transferring contact data. Enter “1234” into the Bluetooth® phone.

   If another Bluetooth® device is connected when transferring contact data, depending on the telephone, the connected Bluetooth® device may need to be disconnected.

   Depending on the type of Bluetooth® phone being connected, it may be necessary to perform additional steps on the telephone.

Not for Reproduction

■ For PBAP incompatible but OPP compatible Bluetooth® Phones

1. Display “Contact/call history settings” screen. (→P. 340)
2. Select “Update contacts from telephone”.
3. Transfer the contact data to the system using a Bluetooth® phone.

   This operation may be unnecessary depending on the type of cellular phone.

   Depending on the type of cellular phone, OBEX authentication may be required when transferring contact data. Enter “1234” into the Bluetooth® phone.

   To cancel this function, select “Cancel”.
4. Select “Done” when it appears on the screen. (on some models)
5. Check that a confirmation screen is displayed when the operation is complete.

■ While driving

The function “Update contacts from telephone” (for PBAP incompatible but OPP compatible Bluetooth® phones) is unavailable.

■ Updating the contacts in a different way (from the “Call history” screen)

For PBAP compatible Bluetooth® phones, this function is available when “Automatic contact/history transfer” is set to off. (→P. 340)

1. Display the telephone top screen. (→P. 322)
2. Select the “Call history” tab and select a contact not yet registered in the contact list.
3. Select “Update contact” on the “Unknown” screen.
4. Select the desired contact.
5. Select a telephone type for the telephone number on the “Number type” screen.

Not for Reproduction

Registering a new contact to the contact list

New contact data can be registered. Up to 4 numbers per person can be registered. For PBAP compatible Bluetooth® phones, this function is available when “Automatic contact/history transfer” is set to off. (→P. 340)

1. Display “Contact/call history settings” screen. (→P. 340)
2. Select “New contact”.
3. Enter the name and select “OK”.
4. Enter the telephone number and select “OK”.
5. Select the telephone type for the telephone number.
6. To add another number to this contact, select “Yes”.

■Registering a new contact in a different way (from the “Call history” screen)

For only OPP compatible Bluetooth® phones, this function is available when “Automatic contact/history transfer” is set to off. (→P. 340)

1. Display the telephone top screen. (→P. 322)
2. Select the “Call history” tab and select a contact not yet registered in the contact list.
3. Select “Add to contacts” on the “Unknown” screen.
4. Follow the steps in “Registering a new contact to the contacts list” from step 3. (→P. 343)

Editing the contact data

For PBAP compatible Bluetooth® phones, this function is available when “Automatic contact/history transfer” is set to off. (→P. 340)

1. Display “Contact/call history settings” screen. (→P. 340)
2. Select “Edit contact”.
3. Select the desired contact.
4. Select corresponding to the desired name or number.

▶ For editing the name

5. Follow the steps in “Registering a new contact to the contacts list” from step 3. (→P. 343)

▶ For editing the number

5. Follow the steps in “Registering a new contact to the contacts list” from step 4. (→P. 343)

Not for Reproduction

■Editing the contacts in a different way (from the “Contact details” screen)

1. Display the telephone top screen. (→P. 322)
2. Select the “Contacts”, “Call history” tab or the “Favourites” tab and select the desired contact.
3. Select “Edit contact”.

   “E-mail addresses”: Select to display all registered e-mail addresses for the contact.
4. Follow the steps in “Editing the contact data” from 4. (→P. 343)

Deleting the contact data

For PBAP compatible Bluetooth® phones, this function is available when “Automatic contact/history transfer” is set to off. (→P. 340)

1. Display “Contact/call history settings” screen. (→P. 340)
2. Select “Delete contacts”.
3. Select the desired contact and select “Delete”.

   Multiple data can be selected and deleted at the same time.
4. Select “Yes” when the confirmation screen appears.

■Deleting the contact in a different way (from the “Contact details” screen)

1. Display the telephone top screen. (→P. 322)
2. Select the “Contacts”, “Call history” tab or the “Favourites” tab and select the desired contact.
3. Select “Delete contact”.
4. Select “Yes” when the confirmation screen appears.

■When a Bluetooth® phone is deleted

The contact data will be deleted at the same time.

Not for Reproduction

Registering the contacts in the favourites list

Up to 15 contacts (maximum of 4 numbers per contact) can be registered in the favourites list.

1. Display “Contact/call history settings” screen. (→P. 340)
2. Select “Add favorite”.
3. Select the desired contact to add to the favourites list.

   Dimmed contacts are already stored as a favourite.
4. Check that a confirmation screen is displayed when the operation is complete.

   ▶ When 15 contacts have already been registered to the favourites list

   1. Display “Contact/call history settings” screen. (→P. 340)
   2. Select “Add favourite”.
   3. When 15 contacts have already been registered to the favourites list, a registered contact needs to be replaced.
      Select “Yes” when the confirmation screen appears to replace a contact.
   4. Select the contact to be replaced.
   5. Check that a confirmation screen is displayed when the operation is complete.

Not for Reproduction

■ Registering contacts in the favourites list in a different way (from the “Contacts” screen)

1. Display the telephone top screen. (→P. 322)
2. Select the “Contacts” tab.
3. Select ☆ at the beginning of the desired contact list name to be registered in the favourites list.

   When selected, ☆ is changed to ★, and the contact is registered in the favourites list.

■ Registering contacts in the favourites list in a different way (from the “Contact details” screen)

1. Display the telephone top screen. (→P. 322)
2. Select the “Contacts” tab or the “Call history” tab and select the desired contact.
3. Select “Add favourite”.
4. Check that a confirmation screen is displayed when the operation is complete.

Not for Reproduction

Deleting the contacts in the favourites list

1. Display “Contact/call history settings” screen. (→P. 340)
2. Select “Remove favourite”.
3. Select the desired contacts and select “Remove”.
4. Select “Yes” when the confirmation screen appears.
5. Check that a confirmation screen is displayed when the operation is complete.

Deleting contacts in the favourites list in a different way (from the “Contacts” screen)

1. Display the telephone top screen. (→P. 322)
2. Select the “Contacts” tab.
3. Select ★ at the beginning of the contact list name to be deleted from the favourites. list.

   When selected, ★ is changed to ☆, and the data is deleted from the list.

Deleting contacts in the favourites list in a different way (from the “Contact details” screen)

1. Display the telephone top screen. (→P. 322)
2. Select the “Contacts”, “Call history” tab or the “Favourites” tab and select the desired contact to delete.
3. Select “Remove favourite”.
4. Select “Yes” when the confirmation screen appears.
5. Check that a confirmation screen is displayed when the operation is complete.

Not for Reproduction

Message settings

1 Display the “Telephone/message settings” screen. (→P. 338)

2 Select “Messaging settings”.

3 Select the desired item to be set.

① Select to set automatic message transfer on/off.

② Select to set automatic message readout on/off.

③ Select to set the SMS/MMS notification popup on/off.

④ Select to set the e-mail notification popup on/off.

⑤ Select to set adding the vehicle signature to outgoing messages on/off.

⑥ Select to set updating message read status on telephone on/off.

⑦ Select to change the incoming SMS/MMS display.

“Full screen”: When an SMS/MMS message is received, the incoming SMS/MMS display screen is displayed and can be operated on the screen.

“Drop-down”: When an SMS/MMS message is received, a message is displayed on the upper side of the screen.

⑧ Select to change the incoming e-mail display.

“Full screen”: When an e-mail is received, the incoming e-mail display screen is the displayed and can be operated on the screen.

“Drop-down”: When an e-mail is received, a message is displayed on the upper side of the screen.

⑨ Select to set display of messaging account names on the inbox tab on/off.

When set to on, messaging account names used on the cellular phone will be displayed.

⑩ Resetting all setup items.

Depending on the telephone, these functions may not be available.

Not for Reproduction

■ **Displaying the "Messaging settings" screen in a different way**

1 Display the telephone top screen. (→P. 322)

2 Select ✉.

3 Select "Settings" on the "Message inbox".

Telephone display settings

1 Display the "Telephone/message settings" screen. (→P. 338)

2 Select "Telephone display settings".

3 Select the desired item to be set.

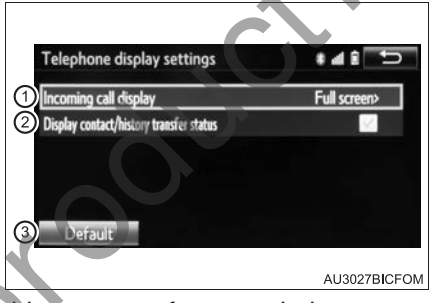

① Changing the incoming call display.

"Full screen": When a call is received, the hands-free screen is displayed and can be operated on the screen.

"Drop-down": A message is displayed on the upper side of the screen.

② Setting display of the contact/ history transfer completion message on/off.

③ Resetting all setup items.

Depending on the telephone, these functions may not be available.

Not for Reproduction

What to do if... (Troubleshooting)

If there is a problem with the hands-free system or a Bluetooth® device, first check the table below.

▶ When using the hands-free system with a Bluetooth® device

The hands-free system or Bluetooth® device does not work.
The Bluetooth® version of the connected cellular phone may be older than the specified version. → **Use a cellular phone with Bluetooth® version 2.0 or higher (recommended: Ver. 3.0 with EDR or higher). (→P. 356)**

Not for Reproduction

▶ When registering/connecting a cellular phone

A cellular phone cannot be registered.
An incorrect passcode was entered on the cellular phone. → **Enter the correct passcode on the cellular phone.**
The registration operation has not been completed on the cellular phone side. → **Complete the registration operation on the cellular phone (approve registration on the telephone).**
Old registration information remains on either this system or the cellular phone. → **Delete the existing registration information from both this system and the cellular phone, then register the cellular phone you wish to connect to this system. (→P. 310)**
A Bluetooth® connection cannot be made.
Another Bluetooth® device is already connected. → **Manually connect the cellular phone you wish to use to this system. (→P. 312)**
Bluetooth® function is not enabled on the cellular phone. → **Enable the Bluetooth® function on the cellular phone.**
Automatic Bluetooth® connection on this system is set to off. ▶ Vehicles without smart entry & start system → **Set automatic Bluetooth® connection on this system to on when the engine switch is turned to the "ACC" or "ON" position.** ▶ Vehicles with smart entry & start system → **Set automatic Bluetooth® connection on this system to on when the engine switch is turned to ACCESSORY or IGNITION ON mode.**
"Unable to dial. Please check your telephone."
Bluetooth® function is not enabled on the cellular phone. → **Enable the Bluetooth® function on the cellular phone.**
Old registration information remains on either this system or the cellular phone. → **Delete the existing registration information from both this system and the cellular phone, then register the cellular phone you wish to connect to this system. (→P. 310)**

Not for Reproduction

▶ When making/receiving a call

A call cannot be made/received.
Your vehicle is in a “No service” area. → **Move to where “No service” no longer appears on the display.**

▶ When using the phonebook

Phonebook data cannot be transferred manually/automatically.
Automatic contact transfer function on this system is set to off. → **Set automatic contact transfer function on this system to on. (→P. 340)**
Passcode has not been entered on the cellular phone. → **Enter the passcode on the cellular phone if requested (default passcode: 1234).**
Transfer operation on the cellular phone has not completed. → **Complete transfer operation on the cellular phone (approve transfer operation on the telephone).**
Phonebook data cannot be edited.
Automatic contact transfer function on this system is set to on. → **Set automatic contact transfer function on this system to off. (→P. 340)**

Not for Reproduction

▶ When using the Bluetooth® message function

Messages cannot be viewed.
Message transfer is not enabled on the cellular phone. → **Enable message transfer on the cellular phone (approve message transfer on the telephone).**
Automatic transfer function on this system is set to off. → **Set automatic transfer function on this system to on. (→P. 348)**
New message notifications are not displayed.
Notification of SMS/MMS/E-mail reception on this system is set to off. → **Set notification of SMS/MMS/E-mail reception on this system to on. (→P. 348)**
Automatic message transfer function is not enabled on the cellular phone. → **Enable automatic transfer function on the cellular phone.**

▶ In other situations

▶ Vehicles without smart entry & start system The Bluetooth® connection status is displayed at the top of the screen each time the engine switch is turned to the “ACC” or “ON” position. ▶ Vehicles with smart entry & start system The Bluetooth® connection status is displayed at the top of the screen each time the engine switch is turned to ACCESSORY or IGNITION ON mode.
Connection confirmation display on this system is set to on. → **To turn off the display, set connection confirmation display on this system to off.**
Even though all conceivable measures have been taken, the symptom status does not change.
The cellular phone is not close enough to this system. → **Bring the cellular phone closer to this system.**
The cellular phone is the most likely cause of the symptom. → **Turn the cellular phone off, remove and reinstall the battery pack, and then restart the cellular phone.** → **Enable the cellular phone’s Bluetooth® connection.** → **Stop the cellular phone’s security software and close all applications.** → **Before using an application installed on the cellular phone, carefully check its source and how its operation might affect this system.**

Not for Reproduction

Bluetooth®

■When using the Bluetooth® audio system

- Depending on the Bluetooth® device that is connected to the system, the music may start playing when selecting ⏸ while it is paused. Conversely, the music may pause when selecting ▶ while it is playing.
- In the following conditions, the system may not function.
  - If the portable audio player is turned off
  - If the portable audio player is not connected
  - If the portable audio player's battery is low
- There may be a delay if a cellular phone connection is made during Bluetooth® audio play.
- Depending on the type of portable audio player that is connected to the system, operation may differ slightly and certain functions may not be available.

■Error messages for Bluetooth® audio

If the following error messages appear on the screen, refer to the table and take the appropriate measures. If the problem is not rectified, take the vehicle to your Toyota dealer.

Message	Cause/Correction procedures
"Music tracks not supported. Please check your portable player."	This indicates a problem in the Bluetooth® device.

■When using the hands-free system

- The audio system is muted when making a call.
- If both parties speak at the same time, it may be difficult to hear.
- If the received call volume is overly loud, an echo may be heard.
  If the Bluetooth® phone is too close to the system, quality of the sound may deteriorate and connection status may deteriorate.
- In the following circumstances, it may be difficult to hear the other party:
  - When driving on unpaved roads
  - When driving at high speeds
  - If a window is open
  - If the air conditioning is blowing directly on the microphone
  - If the air conditioning is set to high
  - If there is interference from the network of the cellular phone

Not for Reproduction

■ **Conditions under which the system will not operate**

- If using a cellular phone that does not support Bluetooth®
- If the cellular phone is turned off
- If you are outside of cellular phone service coverage
- If the cellular phone is not connected
- If the cellular phone's battery is low
- When outgoing calls are controlled, due to heavy traffic on telephone lines, etc.
- When the cellular phone itself cannot be used
- When transferring Contact data from the cellular phone

■ **Bluetooth® antenna**

The antenna is built into the instrument panel.
If the Bluetooth® device is behind the seat or in the glove box or console box, or is touching or covered by metal objects, the connection status may deteriorate.
If the cellular phone is behind the seat or in the console box, or touching or covered by metal objects, the connection status may deteriorate.
Leave the Bluetooth® phone in a place where the condition of the Bluetooth® connection is good.

■ **Battery charge/signal status**

- This display may not correspond exactly with the Bluetooth® device itself.
- This system does not have a charging function.
- The Bluetooth® device battery will be depleted quickly when the device is connected to Bluetooth®.
- When the cellular phone is out of the service area or in a place inaccessible by radio waves, "No Service" is displayed.

■ **When using the Bluetooth® audio and hands-free system at the same time**

The following problems may occur.

- The Bluetooth® audio connection may be interrupted.
- Noise may be heard during Bluetooth® audio playback.

Not for Reproduction

About the Contact in this system

The following data is stored for every registered cellular phone. When another telephone is connecting, you cannot read the registered data.

- Contact data
- Call history
- Favourites
- Image data
- All telephone settings
- Message

When removing a Bluetooth® phone from the system, the above-mentioned data is also deleted.

About Bluetooth®

The Bluetooth® word mark and logos are registered trademarks owned by Bluetooth SIG, Inc. and any use of such marks by FUJITSU TEN LIMITED is under license. Other trademarks and trade names are those of their respective owners.

Compatible models

If the connected Bluetooth® device version is older than recommended or incompatible, the Bluetooth® device function may not work properly.

The Bluetooth® audio system supports portable audio players with the following specifications

- Bluetooth® specifications:
  Ver. 2.0, or higher (Recommended: Ver. 3.0+EDR or higher)
- Profiles:
  - A2DP (Advanced Audio Distribution Profile) Ver. 1.0, or higher (Recommended: Ver. 1.2 or higher)
    This is a profile to transmit stereo audio or high quality sound to the audio system.
  - AVRCP (Audio/Video Remote Control Profile) Ver. 1.0 or higher (Recommended: Ver. 1.4 or higher)
    This is a profile to allow remote control the A/V equipment.

However, please note that some functions may be limited depending on the type of portable audio player connected.

The hands-free system supports cellular phones with the following specifications.

- Bluetooth® specification:
  Ver. 2.0 or higher (Recommended: Ver. 3.0+EDR or higher)

Not for Reproduction

● Profiles:

- HFP (Hands Free Profile) Ver. 1.0 or higher (Recommended: Ver. 1.6 or higher)
  This is a profile to allow hands-free phone calls using a cellular phone or head set. It has outgoing and incoming call functions.
- OPP (Object Push Profile) Ver. 1.1 or higher (Recommended: Ver. 1.2)
  This is a profile to transfer Contact data. When a Bluetooth® compatible cellular phone has both PBAP and OPP, OPP cannot be used.
- PBAP (Phone Book Access Profile) Ver. 1.0 or higher (Recommended: Ver. 1.1)
  This is a profile to transfer contact data.
- MAP (Message Access Profile) Recommended: Ver. 1.0
  This is a profile to use telephone message.

If the cellular phone does not support HFP, you cannot register it with the hands-free system. OPP, PBAP or MAP services must be selected individually.

■ Reconnecting the portable audio player

▶ Vehicles without smart entry & start system

If the portable audio player is disconnected due to poor reception when the engine switch is in the “ACC” or “ON” position, the system automatically reconnects the portable audio player.

▶ Vehicles with smart entry & start system

If the portable audio player is disconnected due to poor reception when the engine switch is in ACCESSORY or IGNITION ON mode, the system automatically reconnects the portable audio player.

If you have switched off the portable audio player yourself, follow the instructions below to reconnect:

● Select the portable audio player again

● Enter the portable audio player

■ When you sell your car

Be sure to delete your personal data. (→P. 271)

Not for Reproduction

WARNING

■ **While driving**

Do not use the portable audio player, cellular phone or connect a device to the Bluetooth® system.

■ **Caution regarding interference with electronic devices**

- Your audio unit is fitted with Bluetooth® antennas. People with implantable cardiac pacemakers, cardiac resynchronization therapy-pacemakers or implantable cardioverter defibrillators should maintain a reasonable distance between themselves and the Bluetooth® antennas. The radio waves may affect the operation of such devices.
- Before using Bluetooth® devices, users of any electrical medical device other than implantable cardiac pacemakers, cardiac resynchronization therapy-pacemakers or implantable cardioverter defibrillators should consult the manufacturer of the device for information about its operation under the influence of radio waves. Radio waves could have unexpected effects on the operation of such medical devices.

NOTICE

■ **When leaving the vehicle**

Do not leave your portable audio player or cellular phone in the vehicle. The inside of the vehicle may become hot, causing damage to the portable audio player or cellular phone.

Not for Reproduction

Interior features 6

6-1. Using the air conditioning system and defogger

Manual air conditioning system 360

Automatic air conditioning system 365

Seat heaters 372

6-2. Using the interior lights

Interior lights list.....373

• Personal/interior light main switch.....374

• Personal/interior lights 374

• Interior light.....374

6-3. Using the storage features

List of storage features 376

• Glove box 377

• Console box 377

• Cup holders 378

• Bottle holders 379

• Auxiliary boxes 380

Luggage compartment features.....383

6-4. Using the other interior features

Other interior features.....384

• Sun visors.....384

• Vanity mirror 384

• Clock 385

• Power outlets.....386

• Grocery bag hooks 387

• Coat hooks 388

• Armrest.....388

Not for Reproduction

Manual air conditioning system*

Air conditioning controls

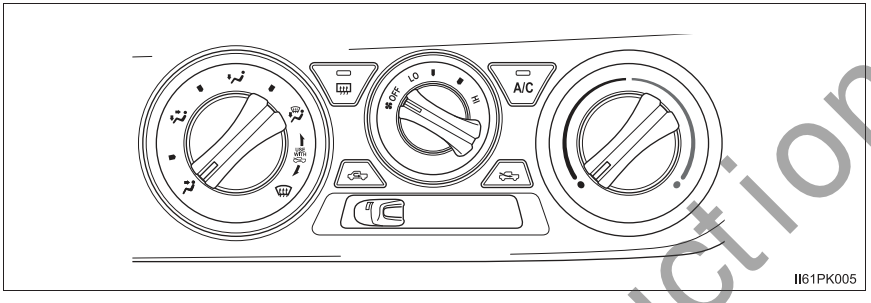

■ Adjusting the fan speed setting

Turn clockwise (increase) or counterclockwise (decrease).

Turning the dial to “OFF” turns off the fan.

■ Adjusting the temperature setting

Turn clockwise (warm) or counterclockwise (cool).

If the is not pressed, the system will blow ambient temperature air or heated air.

■ Changing the air flow mode

Set to the desired position.

The positions between the air outlet selections can also be selected for more delicate adjustment.

Not for Reproduction

*: If equipped

Other functions

■ Switching between outside air and recirculated air modes

Move the outside/recirculated air mode lever.

The mode switches between (introduces air from outside the vehicle) and (recycles air inside the vehicle) each time the lever is moved.

■ Defogging the windshield

1 Set the air outlet selector dial to position.

Set the outside/recirculated air mode lever to outside air mode if recirculated air mode is used.

2 Perform the following operations accordingly:

- To adjust the fan speed, turn .
- To adjust the temperature setting, turn .
- If the dehumidification function is not operating, press to operate the dehumidification function.

To defog the windshield and the side windows early, turn the air flow and temperature up.

■ Defogging the rear window

Defogger is used to defog the rear window.

Press

Not for Reproduction

■ Heater idle up (if equipped)

This feature is used to heat the engine coolant, speed up warming of the cab in cold weather, and keep the cab warm when the vehicle is not moving.

Press the switch to turn the heater idle up on/off.

If you do not turn the switch to off, the engine speed may be increased when the engine is started.

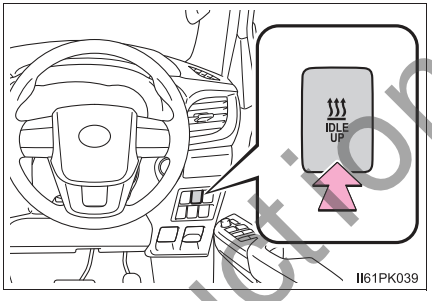

Air outlets

■ Location of air outlets

The air outlets and air volume changes according to the selected air flow mode.

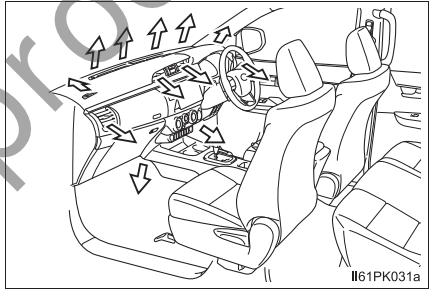

■ Adjusting the position of and opening and closing the air outlets

▶ Center outlets

① Direct air flow to the left or right, up or down.

② Close the vents.

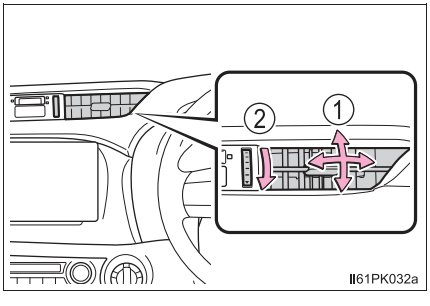

Not for Reproduction

▶ Side outlets

① Direct air flow to the left or right, up or down.

② Close the vents.

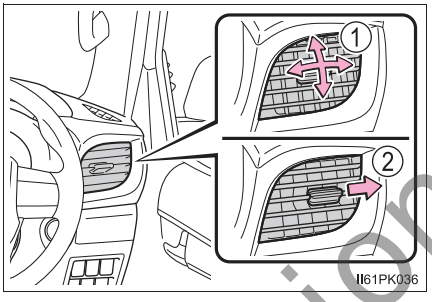

■ **Fogging up of the windows**

● The windows will easily fog up when the humidity in the vehicle is high. Turning A/C on will dehumidify the air from the outlets and defog the windshield effectively.

● If you turn A/C off, the windows may fog up more easily.

● The windows may fog up if the recirculated air mode is used.

■ **Outside/recirculated air mode**

When driving on dusty roads such as tunnels or in heavy traffic, set the outside/recirculated air mode lever to . This is effective in preventing outside air from entering the vehicle interior. During cooling operation, setting the recirculated air mode will also cool the vehicle interior effectively.

■ **When driving on dusty roads**

Close all windows. If dust thrown up by the vehicle is still drawn into the vehicle after closing the windows, it is recommended that the air intake mode be set to outside air mode and the fan speed to any setting except off.

■ **When the outside temperature falls to nearly 0°C (32°F)**

The dehumidification function may not operate even when A/C is pressed.

Not for Reproduction

Ventilation and air conditioning odors

- To let fresh air in, set the air conditioning system to the outside air mode.
- During use, various odors from inside and outside the vehicle may enter into and accumulate in the air conditioning system. This may then cause odor to be emitted from the vents.
- To reduce potential odors from occurring:
  It is recommended that the air conditioning system be set to outside air mode prior to turning the vehicle off.

Air conditioning filter

→P. 423

WARNING

To prevent the windshield from fogging up

- Do not set the air outlet selector dial to during cool air operation in extremely humid weather. The difference between the temperature of the outside air and that of the windshield can cause the outer surface of the windshield to fog up, blocking your vision.
- Do not place anything on the instrument panel which may cover the air outlets. Otherwise, air flow may be obstructed, preventing the windshield defoggers from defogging.

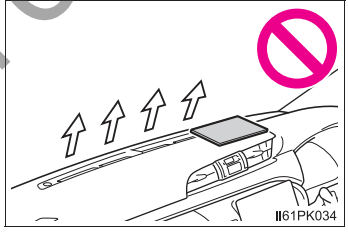

NOTICE

To prevent battery discharge

Do not leave the air conditioning system on longer than necessary when the engine is off.

Not for Reproduction

Automatic air conditioning system*

Air outlets and fan speed are automatically adjusted according to the temperature setting.

Air conditioning controls

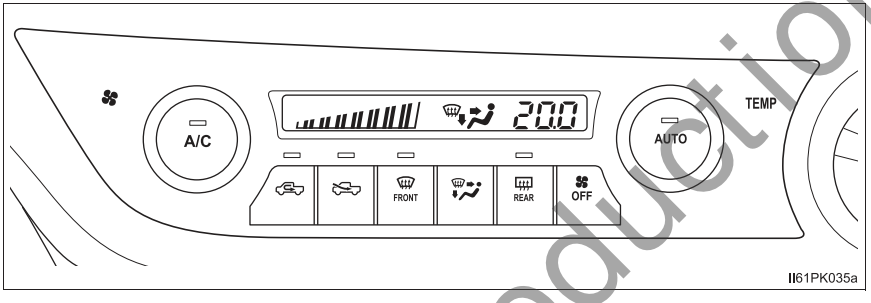

■ Adjusting the fan speed setting

Turn A/C clockwise (increase) or counterclockwise (decrease).

Press OFF to turn the fan off.

■ Adjusting the temperature setting

Turn AUTO clockwise (warm) or counterclockwise (cool).

If A/C is not pressed, the system will blow ambient temperature air or heated air.

Not for Reproduction

*: If equipped

■ Changing the air flow mode

Press to change the air outlets.

The air outlets used are switched each time the button is pressed.

① Air flows to the upper body.

② Air flows to the upper body and feet.

③ Mainly air flows to the feet.

④ Air flows to the feet and the windshield defogger operates.

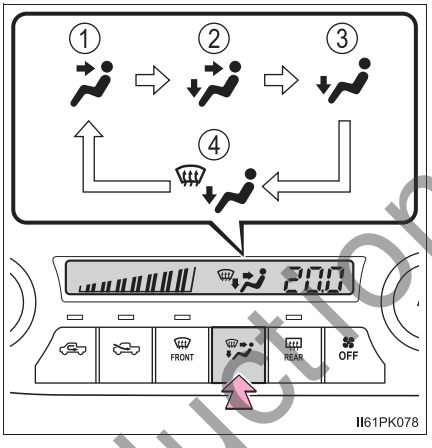

Using automatic mode

1 Press .

The dehumidification function begins to operate. Air outlets and fan speed are automatically adjusted according to the temperature setting.

2 Turn clockwise (warm) or counterclockwise (cool) to adjust the temperature.

To stop the operation, press .

■ Automatic mode indicator

If the fan speed setting or air flow modes are operated, the automatic mode indicator goes off. However, automatic mode for functions other than that operated is maintained.

Not for Reproduction

Other functions

■ Switching between outside air and recirculated air modes

Press to switch to recirculated air mode and press to switch to outside air mode.

■ Defogging the windshield

Press FRONT.

The dehumidification function operates and fan speed increases.

Press if the recirculated air mode is used. (It may switch automatically.)
To defog the windshield and the side windows early, turn the air flow and temperature up.

To return to the previous mode, press FRONT again when the windshield is defogged.

■ Defogging the rear window

Defogger is used to defog the rear window.

Press REAR

The defogger will automatically turn off after approximately 15 minutes.

■ Heater idle up (if equipped)

This feature is used to heat the engine coolant, speed up warming of the cab in cold weather, and keep the cab warm when the vehicle is not moving.

Press the switch to turn the heater idle up on/off.

If you do not turn the switch to off, the engine speed may be increased when the engine is started.

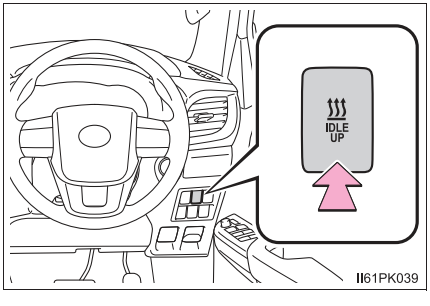

Not for Reproduction

Air outlets

■ Location of air outlets

The air outlets and air volume changes according to the selected air flow mode.

⇦ : Some models

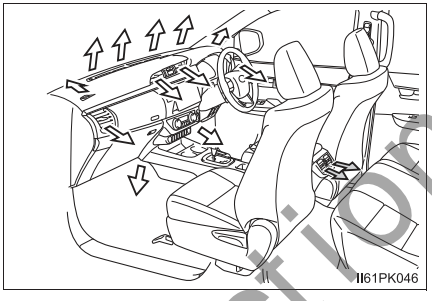

■ Adjusting the position of and opening and closing the air outlets

▶ Center outlets

① Direct air flow to the left or right, up or down.

② Close the vents.

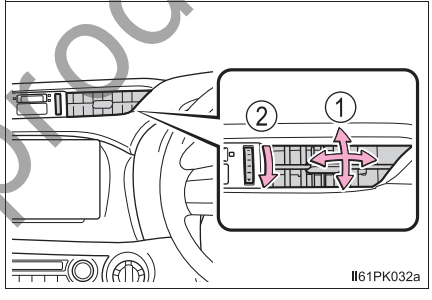

▶ Side outlets

① Direct air flow to the left or right, up or down.

② Close the vents.

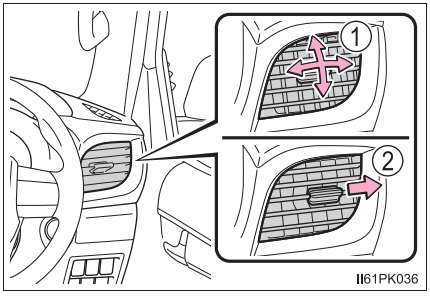

Not for Reproduction

▶ Rear outlets

① Direct air flow to the left or right, up or down.

② Close the vents.

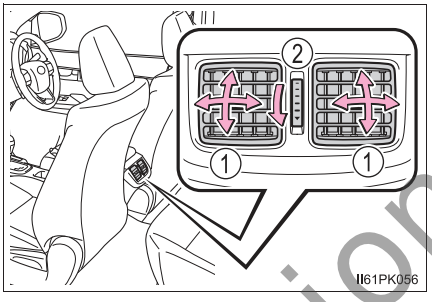

■ **Using automatic mode**

Fan speed is adjusted automatically according to the temperature setting and the ambient conditions.

Therefore, the fan may stop for a while until warm or cool air is ready to flow immediately after AUTO is pressed.

■ **Fogging up of the windows**

- The windows will easily fog up when the humidity in the vehicle is high. Turning A/C on will dehumidify the air from the outlets and defog the windshield effectively.
- If you turn A/C off, the windows may fog up more easily.
- The windows may fog up if the recirculated air mode is used.

■ **Outside/recirculated air mode**

- When driving on dusty roads such as tunnels or in heavy traffic, press .
  This is effective in preventing outside air from entering the vehicle interior. During cooling operation, setting the recirculated air mode will also cool the vehicle interior effectively.
- Outside/recirculated air mode may automatically switch depending on the temperature setting or the inside temperature.

Not for Reproduction

■ **Operation of the air conditioning system in Eco drive mode (if equipped)**

● In Eco drive mode, the air conditioning system is controlled as follows to prioritize fuel efficiency:

- Engine speed and compressor operation controlled to restrict heating/cooling capacity
- Fan speed restricted when automatic mode is selected

● To improve air conditioning performance, perform the following operations.

- Adjust the fan speed
- Turn off Eco drive mode
- Adjust the temperature setting

■ **When the outside temperature falls to nearly 0°C (32°F)**

The dehumidification function may not operate even when A/C is pressed.

■ **When driving on dusty roads**

Close all windows. If dust thrown up by the vehicle is still drawn into the vehicle after closing the windows, it is recommended that the air intake mode be set to outside air mode and the fan speed to any setting except off.

■ **Ventilation and air conditioning odors**

● To let fresh air in, set the air conditioning system to the outside air mode.

● During use, various odors from inside and outside the vehicle may enter into and accumulate in the air conditioning system. This may then cause odor to be emitted from the vents.

● To reduce potential odors from occurring:

- It is recommended that the air conditioning system be set to outside air mode prior to turning the vehicle off.
- The start timing of the blower may be delayed for a short period of time immediately after the air conditioning system is started in automatic mode.

■ **Air conditioning filter**

→P. 423

Not for Reproduction

WARNING

■ To prevent the windshield from fogging up

- Do not use FRONT during cool air operation in extremely humid weather. The difference between the temperature of the outside air and that of the windshield can cause the outer surface of the windshield to fog up, blocking your vision.
- Do not place anything on the instrument panel which may cover the air outlets. Otherwise, air flow may be obstructed, preventing the windshield defoggers from defogging.

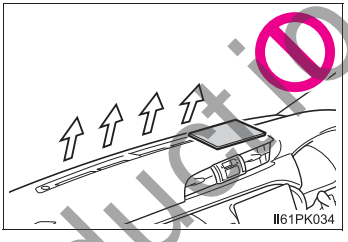

NOTICE

■ To prevent battery discharge

Do not leave the air conditioning system on longer than necessary when the engine is off.

Not for Reproduction

Seat heaters*

① Turns on the front left seat heater

The indicator light comes on.

② Turns on the front right seat heater

The indicator light comes on.

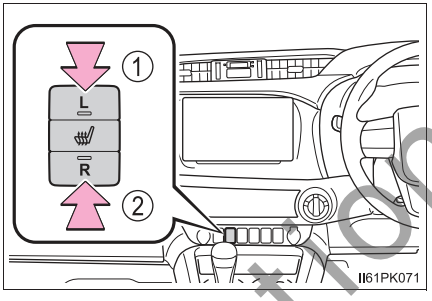

- The seat heaters can be used when the engine switch is in IGNITION ON mode.
- When not in use, press the seat heater switch to turn the seat heater off. The indicator light turns off.

WARNING

- Care should be taken to prevent injury if anyone in the following categories comes in contact with the seats when the heater is on:
  - Babies, small children, the elderly, the sick and the physically challenged
  - Persons with sensitive skin
  - Persons who are fatigued
  - Persons who have taken alcohol or drugs that induce sleep (sleeping drugs, cold remedies, etc.)
- Observe the following precautions to prevent minor burns or overheating:
  - Do not cover the seat with a blanket or cushion when using the seat heater.
  - Do not use seat heater more than necessary.

NOTICE

- Do not put heavy objects that have an uneven surface on the seat and do not stick sharp objects (needles, nails, etc.) into the seat.
- To prevent battery discharge, do not use the functions when the engine is not running.

*: If equipped

Not for Reproduction

Interior lights list

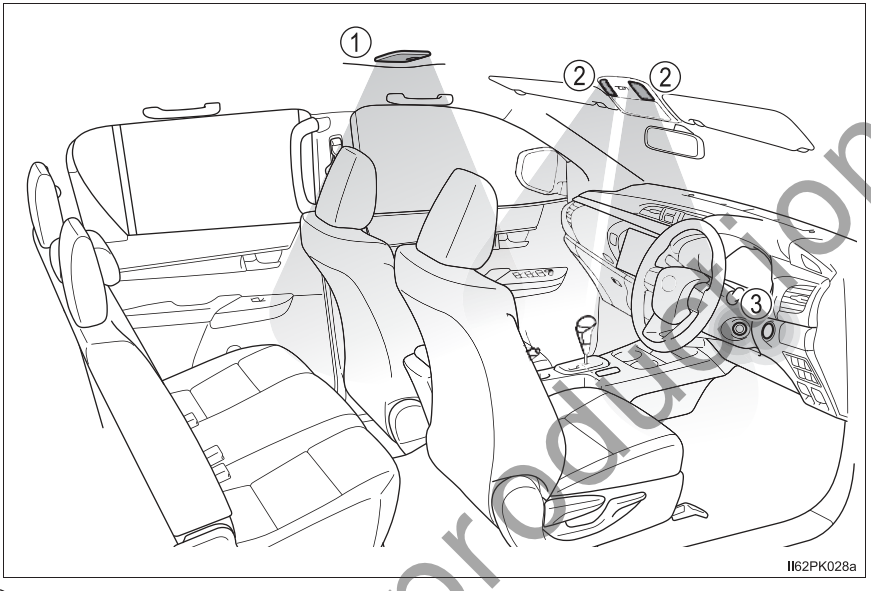

① Interior light (if equipped) (→P. 374)

② Personal/interior lights (→P. 374)

③ Engine switch light

Not for Reproduction

Personal/interior light main switch

① Door position

The personal/interior lights come on when a door is opened. They turn off when the doors are closed.

② Off

The personal/interior lights can be individually turned on or off.

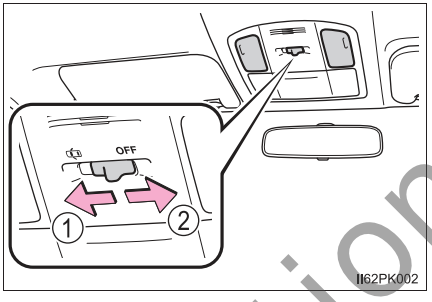

Personal/interior lights

On/off

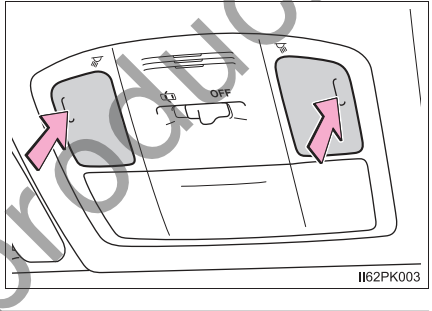

Interior light (if equipped)

① Off

② Door position

The interior light comes on when a door is opened. It turns off when the doors are closed.

③ On

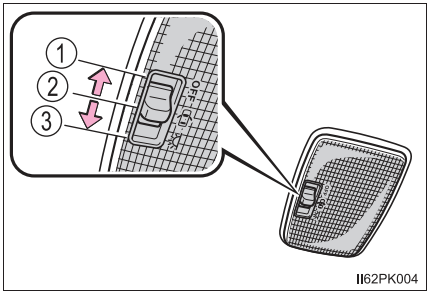

Not for Reproduction

- Illuminated entry system (if equipped):

  ▶ Vehicles without smart entry & start system

  The lights automatically turn on/off according to the engine switch position, whether the doors are locked/unlocked, and whether the doors are opened/closed.

  ▶ Vehicles with smart entry & start system

  The lights automatically turn on/off according to engine switch mode, whether the doors are locked/unlocked, and whether the doors are opened/closed.

- If the following lights remain on when the engine switch is turned to the "LOCK" position (vehicles without smart entry & start system) or off (vehicles with smart entry & start system), the lights will go off automatically after 20 minutes:
  - Personal/interior light
  - Interior light (if equipped)
  - Engine switch light

NOTICE

To prevent battery discharge, do not leave the lights on longer than necessary when the engine is not running.

Not for Reproduction

List of storage features

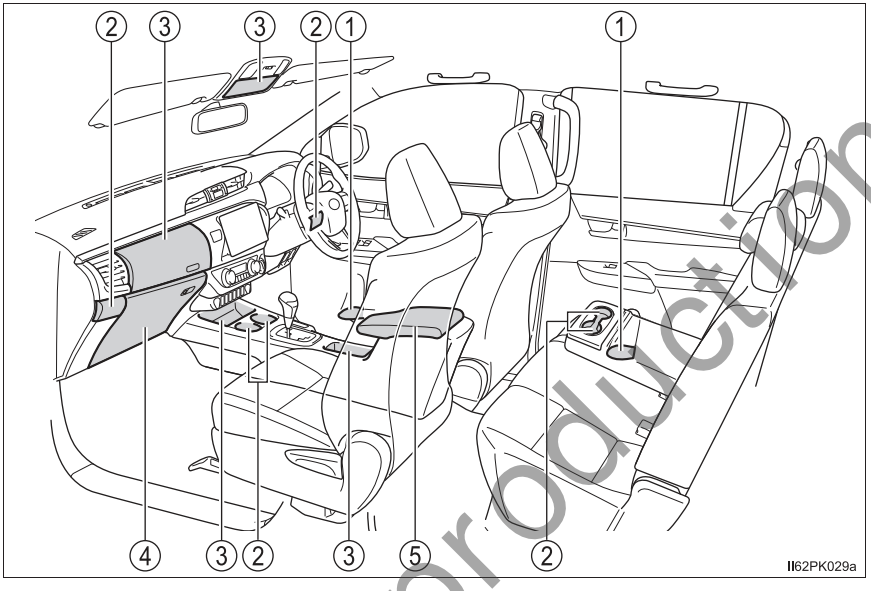

① Bottle holders (if equipped) (→P. 379)

② Cup holders (if equipped) (→P. 378)

③ Auxiliary boxes (if equipped) (→P. 380)

④ Glove box (→P. 377)

⑤ Console box (if equipped) (→P. 377)

Not for Reproduction

WARNING

- Do not leave glasses, lighters or spray cans in the storage spaces, as this may cause the following when cabin temperature becomes high:
  - Glasses may be deformed by heat or cracked if they come into contact with other stored items.
  - Lighters or spray cans may explode. If they come into contact with other stored items, the lighter may catch fire or the spray can may release gas, causing a fire hazard.
- When driving or when the glove box and the console box are not in use, keep it closed.
  In the event of sudden braking or sudden swerving, an accident may occur due to an occupant being struck by an open lid or the items stored inside.

Glove box

① Open (push button)

② Unlock with the master key or the mechanical key

③ Lock with the master key or the mechanical key

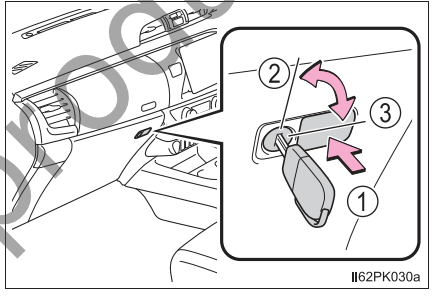

Console box (if equipped)

Lift the lid while pulling up the knob to release the lock.

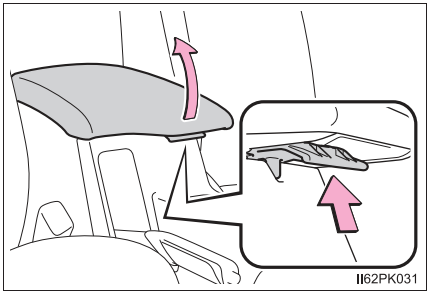

Not for Reproduction

Cup holders

▶ Type A

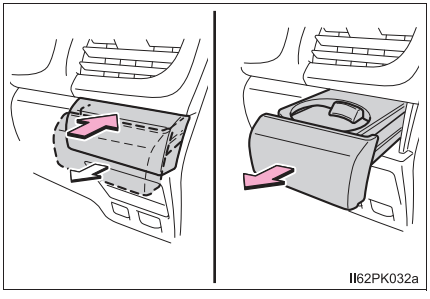

▶ Type B (if equipped)

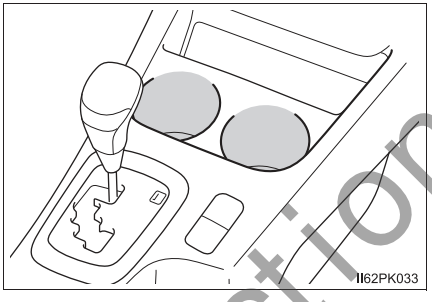

Press in and pull the cup holder.

▶ Type C (if equipped)

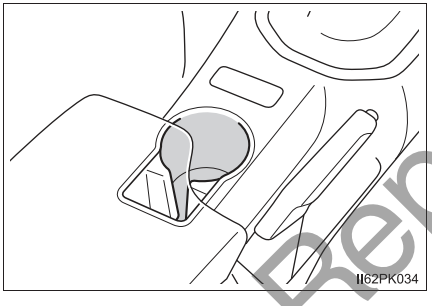

▶ Type D (if equipped)

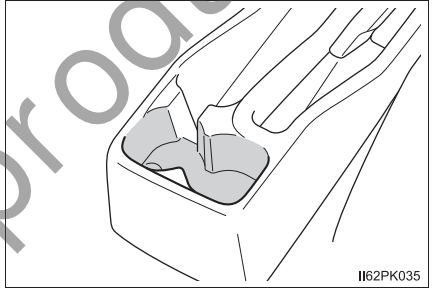

▶ Type E (if equipped)

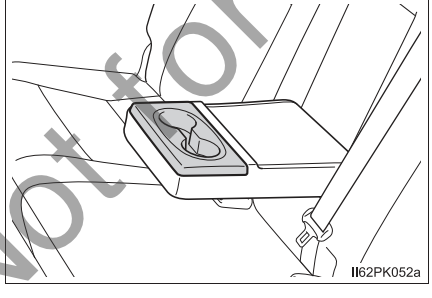

Pull the armrest down.

Not for Reproduction

WARNING

Do not place anything other than cups or beverage cans in the cup holders. Even when the lid is closed, items must not be stored in the cup holders. Other items may be thrown out of the holders in the event of sudden braking, sudden swerving or an accident, cause injury. If possible, cover hot drinks to prevent burns.

Bottle holders

▶ For front seats

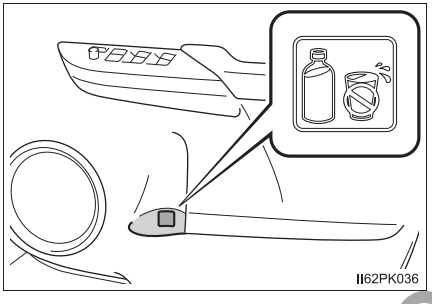

▶ For rear seats (if equipped)

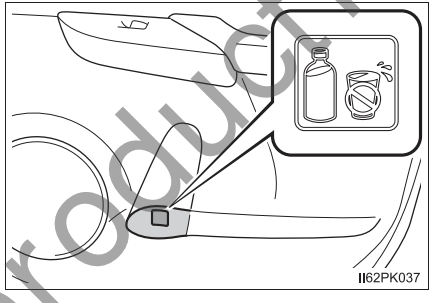

● When using the holder as a bottle holder:

- When storing a bottle, close the cap.
- The bottle may not be stored depending on its size or shape.

WARNING

Do not place anything other than a bottle in the bottle holders.
Other items may be thrown out of the holders in the event of an accident or sudden braking and cause injury.

NOTICE

Do not place open bottles or glass and paper cups containing liquid in the bottle holders. The contents may spill and glasses may break.

Not for Reproduction

Auxiliary boxes

▶ Type A

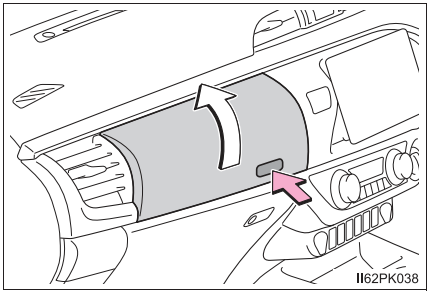

Press the button.

▶ Type B

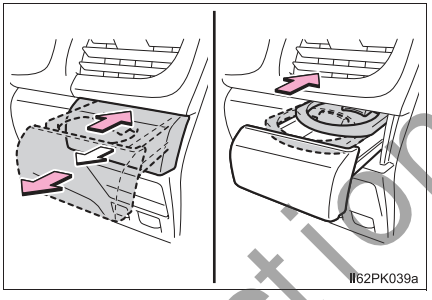

Press in and pull the cup holder, and push the cup tray.

▶ Type C

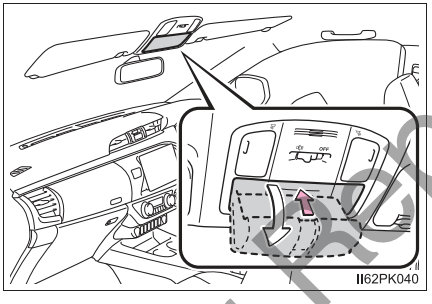

Press in the lid.

The auxiliary box is useful for temporarily storing sunglasses and similar small items.

▶ Type D*

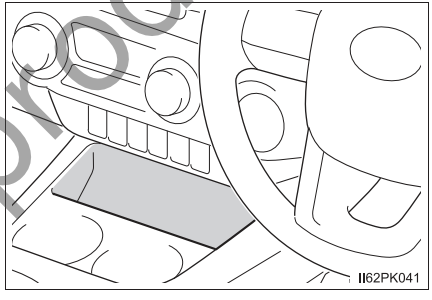

▶ Type E (if equipped)

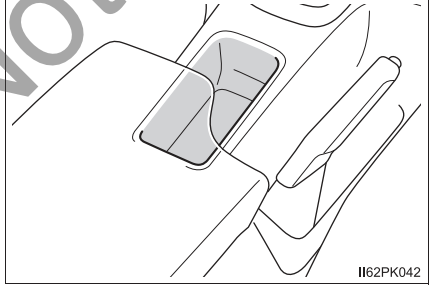

▶ Type F (if equipped)

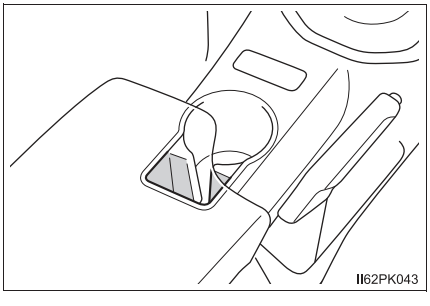

Not for Reproduction

▶ Type G (if equipped)

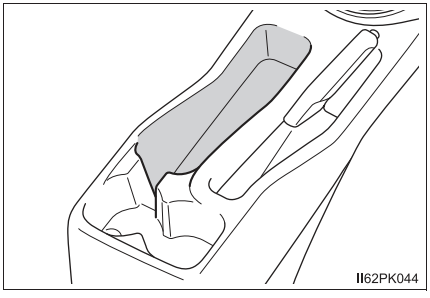

*: The shape of the auxiliary box may differ depending on the grade, etc.

● Air conditioning-linked temperature regulation function (type A) (if equipped):

By introducing air from the air conditioning system into the auxiliary box, canned drinks etc. can be kept hot or cold. However, as the temperature inside the auxiliary box will become the same as the temperature of the air flowing from the air conditioning system, extreme heating and cooling are not possible. In high humidity condition, be careful of objects inside the auxiliary box, as condensation may form.

● Using the air conditioning-linked temperature regulation function (type A) (if equipped):

1 Open the air intake lid inside the auxiliary box.
To blow a large amount of air into the auxiliary box, close the passenger side vent. (→P. 362, 368)

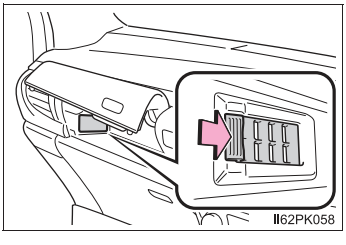

2 Allow the air conditioning system to operate, and use or to select either or . (→P. 360, 366)

3 Adjust the temperature. (→P. 360, 365)

● Normal use (type A) (if equipped):

Close the air intake lid inside the auxiliary box.

● Items unsuitable for the auxiliary box (type A) (if equipped):

- Drinks in unsealed container
- Fragile items, perishables or anything with strong odor

Not for Reproduction

WARNING

- Do not store items heavier than 0.2 kg (0.4 lb.).
  Doing so may cause the auxiliary box to open and the items inside may fall out, resulting in an accident. (type C)
- Keep the auxiliary boxes closed. In the event of sudden braking, an accident may occur due to an occupant being struck by an open auxiliary box or the items stored inside. (type A, B and C)
- When using the auxiliary boxes, do not use the cup tray.
  If a cup, aluminum can or bottle is placed in the auxiliary box, it may be thrown out of the box in the event of an accident or sudden braking, resulting in injury. (type B)

Not for Reproduction

Luggage compartment features

Deck hooks (if equipped)

Deck hooks are provided for securing loose items.

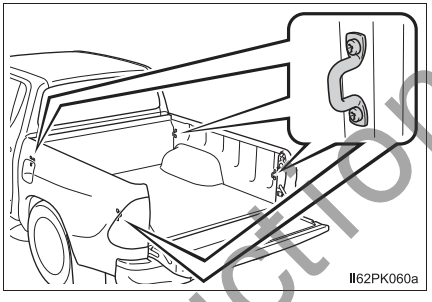

Not for Reproduction

Other interior features

Sun visors

① To set the visor in the forward position, flip it down.

② To set the visor in the side position, flip down, unhook, and swing it to the side.

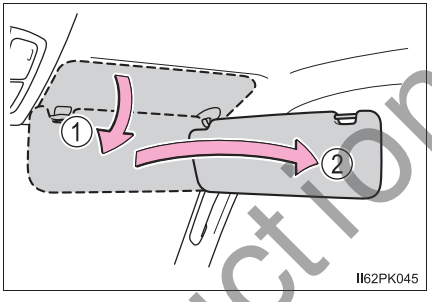

Vanity mirror (if equipped)

Open the cover to use.

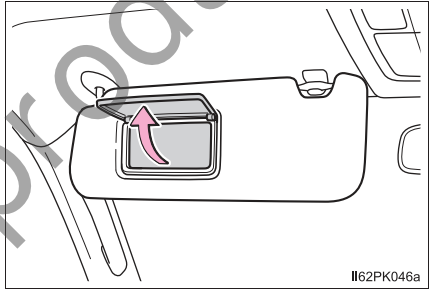

Not for Reproduction

Clock

The clock can be adjusted by pressing the buttons.

① Adjusts the hours

② Adjusts the minutes

③ Rounds to the nearest hour*

*: e.g. 1:00 to 1:29 → 1:00
1:30 to 1:59 → 2:00

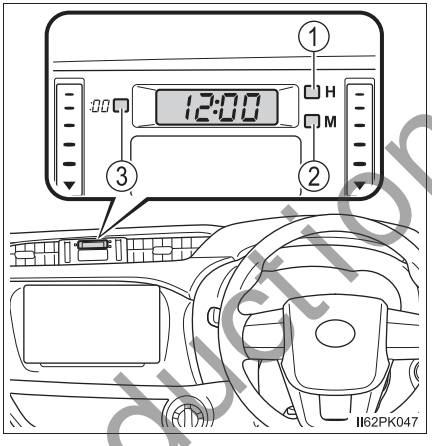

- The clock is displayed when:
  ▶ Vehicles without smart entry & start system
  The engine switch is in the “ACC” or “ON” position.
  ▶ Vehicles with smart entry & start system
  The engine switch is in ACCESSORY or IGNITION ON mode.
- When disconnecting and reconnecting battery terminals:
  The time display will automatically be set to 1:00.

Not for Reproduction

Power outlets (if equipped)

The power outlet can be used for the following components:

12 V DC:
Please use as a power supply for electronic goods that use less than 12 V DC / 10 A (power consumption of 120 W).
When using electronic goods, make sure that the power consumption of all the connected power outlets is less than 120 W.

220 V AC:
Accessories that use less than 100 W.

■ 12 V DC

Open the cover.

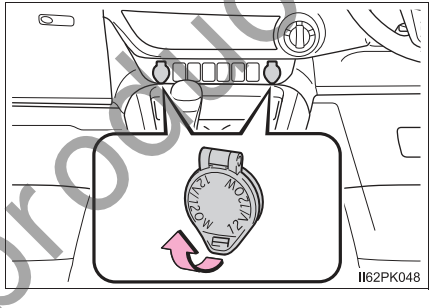

II62PK048

■ 220 V AC

Open the cover.

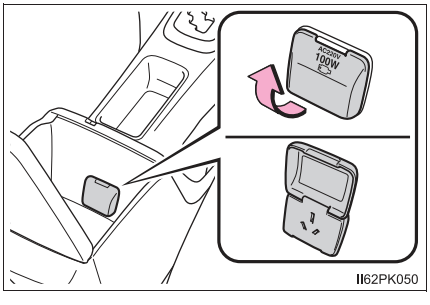

II62PK050

● The power outlet can be used when:

▶ Vehicles without smart entry & start system

12 V DC: The engine switch is in the “ACC” or “ON” position.

▶ Vehicles with smart entry & start system

12 V DC: The engine switch is in ACCESSORY or IGNITION ON mode.

220 V AC: The engine switch is in IGNITION ON mode.

Not for Reproduction

NOTICE

- To avoid damaging the power outlets, close the power outlet lid when the power outlet is not in use.
  Foreign objects or liquids that enter the power outlet may cause a short circuit.
- To prevent blown fuse:
  ▶ 12 V DC
  Do not use an accessory that uses more than 12 V 10 A.
  ▶ 220 V AC
  Do not use a 220 V AC appliance that requires more than 100 W.
  If a 220 V AC appliance that consumes more than 100 W is used, the protection circuit will cut the power supply.
- To prevent battery discharge, do not use the power outlet longer than necessary when the engine is not running.
- The following 220 V AC appliances may not operate properly even if their power consumption is under 100 W:
  - Appliances with high initial peak wattage
  - Measuring devices that process precise data
  - Other appliances that require an extremely stable power supply

Grocery bag hooks (if equipped)

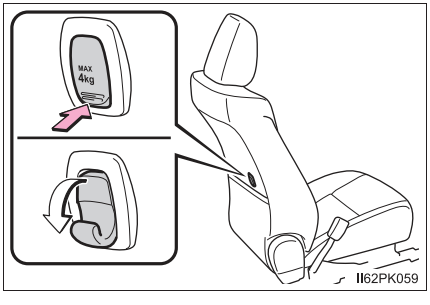

WARNING

Keep the hooks returned in place when not in use.

NOTICE

Do not hang any object heavier than 4 kg (8.8 lb.).

Not for Reproduction

Coat hooks (if equipped)

The coat hooks are provided above the back window.

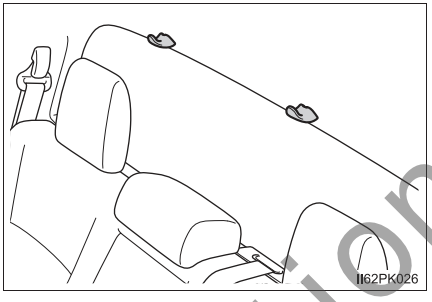

Armrest (if equipped)

Fold down the armrest for use.

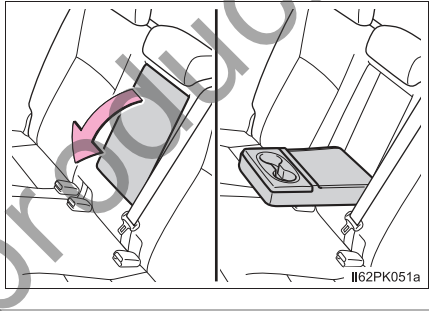

NOTICE

To prevent damage to the armrest, do not apply too much load on the armrest.

Not for Reproduction

Maintenance and care 7

7-1. Maintenance and care
Cleaning and protecting the vehicle exterior 390
Cleaning and protecting the vehicle interior 393
7-2. Maintenance
Maintenance requirements.....396
7-3. Do-it-yourself maintenance
Do-it-yourself service precautions 398
Hood 400
Engine compartment.....402
Tires.....416
Tire inflation pressure 419
Wheels.....421
Air conditioning filter 423
Wireless remote control/ electronic key battery.....425
Checking and replacing fuses 428
Light bulbs 433

Not for Reproduction

Cleaning and protecting the vehicle exterior

Perform the following to protect the vehicle and maintain it in prime condition:

- Working from top to bottom, liberally apply water to the vehicle body, wheel wells and underside of the vehicle to remove any dirt and dust.
- Wash the vehicle body using a sponge or soft cloth, such as a chamois.
- For hard-to-remove marks, use car wash soap and rinse thoroughly with water.
- Wipe away any water.
- Wax the vehicle when the waterproof coating deteriorates.

  If water does not bead on a clean surface, apply wax when the vehicle body is cool.

■ **Automatic car washes**

- Fold the mirrors and remove the antenna before washing the vehicle. Start washing from the front of the vehicle. Make sure to re-install the antenna and extend the mirrors before driving.
- Brushes used in automatic car washes may scratch the vehicle surface and harm your vehicle's paint.

■ **High pressure car washes**

- Do not allow the nozzles of the car wash to come within close proximity of the windows.
- Vehicles with fuel filler door: Before using the car wash, check that the fuel filler door on your vehicle is closed properly.

Not for Reproduction

■ **Aluminum wheels (if equipped)**

- Remove any dirt immediately by using a neutral detergent.
- Wash detergent off with water immediately after use.
- To protect the paint from damage, make sure to observe the following precautions.
  - Do not use acidic, alkaline or abrasive detergent
  - Do not use hard brushes
  - Do not use detergent on the wheels when they are hot, such as after driving or parking in hot weather

■ **Bumpers**

Do not scrub with abrasive cleaners.

WARNING

■ **When washing the vehicle**

Do not apply water to the inside of the engine compartment. Doing so may cause the electrical components etc. to catch fire.

■ **Precautions regarding the exhaust pipe**

Exhaust gasses cause the exhaust pipe to become quite hot.

When washing the vehicle, be careful not to touch the pipe until it has cooled sufficiently, as touching a hot exhaust pipe can cause burns.

Not for Reproduction

NOTICE

■ **To prevent paint deterioration and corrosion on the body and components (aluminum wheels etc.)**

- Wash the vehicle immediately in the following cases:
  - After driving near the sea coast
  - After driving on salted roads
  - If coal tar or tree sap is present on the paint surface
  - If dead insects, insect droppings or bird droppings are present on the paint surface
  - After driving in an area contaminated with soot, oily smoke, mine dust, iron powder or chemical substances
  - If the vehicle becomes heavily soiled with dust or mud
  - If liquids such as benzene and gasoline are spilled on the paint surface
- If the paint is chipped or scratched, have it repaired immediately.
- To prevent the wheels from corroding, remove any dirt and store in a place with low humidity when storing the wheels.

■ **Cleaning the exterior lights**

- Wash carefully. Do not use organic substances or scrub with a hard brush. This may damage the surfaces of the lights.
- Do not apply wax to the surfaces of the lights.
  Wax may cause damage to the lenses.

■ **Antenna installation and removal precautions**

- Before driving, ensure that the antenna is installed.
- When the antenna is removed, such as before entering an automatic car wash, make sure to store it in a suitable place so as not to lose it. Also, before driving, make sure to reinstall the antenna in its original position.

■ **When using a high pressure car wash**

Do not bring the nozzle tip close to boots (rubber or resin manufactured cover), connectors or the following parts. The parts may be damaged if they come into contact with high-pressure water.

- Traction related parts
- Steering parts
- Suspension parts
- Brake parts

Not for Reproduction

Cleaning and protecting the vehicle interior

The following procedures will help protect your vehicle's interior and keep it in top condition:

Protecting the vehicle interior

- Remove dirt and dust using a vacuum cleaner. Wipe dirty surfaces with a cloth dampened with lukewarm water.
- If dirt cannot be removed, wipe it off with a soft cloth dampened with neutral detergent diluted to approximately 1%.
- Wring out any excess water from the cloth and thoroughly wipe off remaining traces of detergent and water.

Cleaning the leather areas

- Remove dirt and dust using a vacuum cleaner.
- Wipe off any excess dirt and dust with a soft cloth dampened with diluted detergent.

  Use a diluted water solution of approximately 5% neutral wool detergent.
- Wring out any excess water from the cloth and thoroughly wipe off all remaining traces of detergent.
- Wipe the surface with a dry, soft cloth to remove any remaining moisture. Allow the leather to dry in a shaded and ventilated area.

Cleaning the synthetic leather areas

- Remove dirt and dust using a vacuum cleaner.
- Wipe it off with a soft cloth dampened with neutral detergent diluted to approximately 1%.
- Wring out any excess water from the cloth and thoroughly wipe off remaining traces of detergent and water.

Not for Reproduction

Caring for leather areas

Toyota recommends cleaning the interior of the vehicle at least twice a year to maintain the quality of the vehicle's interior.

Shampooing the carpets

There are several commercial foaming-type cleaners available. Use a sponge or brush to apply the foam. Rub in overlapping circles. Do not use water. Wipe dirty surfaces and let them dry. Excellent results are obtained by keeping the carpet as dry as possible.

Seat belts

Clean with mild soap and lukewarm water using a cloth or sponge. Also check the belts periodically for excessive wear, fraying or cuts.

WARNING

Water in the vehicle

- Do not splash or spill liquid in the vehicle.
  Doing so may cause electrical components etc. to malfunction or catch fire.
- Do not get any of the SRS components or wiring in the vehicle interior wet. (→P. 36)
  An electrical malfunction may cause the airbags to deploy or not function properly, resulting in death or serious injury.

Cleaning the interior (especially instrument panel)

Do not use polish wax or polish cleaner. The instrument panel may reflect off the windshield, obstructing the driver's view and leading to an accident, resulting in death or serious injury.

Not for Reproduction

NOTICE

■ **Cleaning detergents**

- Do not use the following types of detergent, as they may discolor the vehicle interior or cause streaks or damage to painted surfaces:
  - Non-seat portions: Organic substances such as benzene or gasoline, alkaline or acidic solutions, dye, and bleach
  - Seats: Alkaline or acidic solutions, such as thinner, benzene, and alcohol
- Do not use polish wax or polish cleaner. The instrument panel's or other interior part's painted surface may be damaged.

■ **Preventing damage to leather surfaces**

Observe the following precautions to avoid damage to and deterioration of leather surfaces:

- Remove any dust or dirt from leather surfaces immediately.
- Do not expose the vehicle to direct sunlight for extended periods of time. Park the vehicle in the shade, especially during summer.
- Do not place items made of vinyl, plastic, or containing wax on the upholstery, as they may stick to the leather surface if the vehicle interior heats up significantly.

■ **Water on the floor**

Do not wash the vehicle floor with water.
Vehicle systems such as the audio system may be damaged if water comes into contact with electrical components such as the audio system above or under the floor of the vehicle. Water may also cause the body to rust.

■ **Cleaning the inside of the rear window**

- Do not use glass cleaner to clean the rear window, as this may cause damage to the rear window defogger heater wires. Use a cloth dampened with lukewarm water to gently wipe the window clean. Wipe the window in strokes running parallel to the heater wires.
- Be careful not to scratch or damage the heater wires.

Not for Reproduction

Maintenance requirements

To ensure safe and economical driving, day-to-day care and regular maintenance are essential. Toyota recommends the following maintenance:

Scheduled maintenance

Scheduled maintenance should be performed at specified intervals according to the maintenance schedule.

For full details of your maintenance schedule, refer to the “Warranty and Service Booklet”.

Do-it-yourself maintenance

What about do-it-yourself maintenance?

Many maintenance items are easy to do yourself if you have a little mechanical ability and a few basic automotive tools.

Note, however, that some maintenance tasks require special tools and skills. These are best performed by qualified technicians. Even if you are an experienced do-it-yourself mechanic, we recommend that repairs and maintenance be conducted by your Toyota dealer who will keep a record of maintenance on your vehicle. This record could be helpful should you ever require Warranty Service.

Not for Reproduction

Where to go for maintenance service?

It makes good sense to take your vehicle to your local Toyota dealer for maintenance service as well as other inspections and repairs.

Toyota technicians are well-trained specialists receiving the latest service information through technical bulletins, service tips, and in-dealership training programs. They learn to work on Toyota before they work on your vehicle, rather than while they are working on it. Doesn't that seem like the best way?

Your Toyota dealer has invested a lot of money in special Toyota tools and service equipment. It helps them to do the job better and at less cost.

Your Toyota dealer's service department will perform all of the scheduled maintenance on your vehicle reliably and economically.

Does your vehicle need repairs?

Be on the alert for changes in performance and sounds, and visual tip-offs that indicate service is needed. Some important clues are:

- Engine missing, stumbling or pinging
- Appreciable loss of power
- Strange engine noises
- A fluid leak under the vehicle (However, water dripping from the air conditioning system after use is normal.)
- Change in exhaust sound (This may indicate a dangerous carbon monoxide leak. Drive with the windows open and have the exhaust system checked immediately.)
- Flat-looking tires, excessive tire squeal when cornering, uneven tire wear
- Vehicle pulls to one side when driven straight on a level road
- Strange noises related to suspension movement
- Loss of brake effectiveness, spongy feeling brake pedal or clutch pedal, pedal almost touches the floor, vehicle pulls to one side when braking
- Engine coolant temperature continually higher than normal

If you notice any of these clues, take your vehicle to your Toyota dealer as soon as possible. Your vehicle may need adjustment or repair.

WARNING

If your vehicle is not properly maintained

Improper maintenance could result in serious damage to the vehicle and possible serious injury or death.

Handling of the battery

Battery posts, terminals and related accessories contain lead and lead compounds which are known to cause brain damage. Wash your hands after handling. (→P. 410)

Not for Reproduction

Do-it-yourself service precautions

If you perform maintenance by yourself, be sure to follow the correct procedure as given in these sections.

Items	Parts and tools
Battery condition (→P. 410)	• Warm water • Baking soda • Grease • Conventional wrench (for terminal clamp bolts) • Distilled water
Engine coolant level (→P. 408)	• “Toyota Super Long Life Coolant” or a similar high quality ethylene glycol-based non-silicate, non-amine, non-nitrite and non-borate coolant with long-life hybrid organic acid technology “Toyota Super Long Life Coolant” is pre-mixed with 50% coolant and 50% deionized water. • Funnel (used only for adding coolant)
Engine oil level (→P. 405)	• “Toyota Genuine Motor Oil” or equivalent • Rag or paper towel • Funnel (used only for adding engine oil)
Fuses (→P. 428)	• Fuse with same amperage rating as original
Light bulbs (→P. 433)	• Bulb with same number and wattage rating as original • Phillips-head screwdriver • Flathead screwdriver • Wrench
Radiator, condenser and intercooler (if equipped) (→P. 410)	—
Tire inflation pressure (→P. 419)	• Tire pressure gauge • Compressed air source
Washer fluid (→P. 414)	• Water or washer fluid containing antifreeze (for winter use) • Funnel (used only for adding water or washer fluid)

Not for Reproduction

WARNING

The engine compartment contains many mechanisms and fluids that may move suddenly, become hot, or become electrically energized. To avoid death or serious injury, observe the following precautions.

■ When working on the engine compartment

- Keep hands, clothing and tools away from the moving fan and engine drive belt.
- Be careful not to touch the engine, radiator, exhaust manifold, etc. right after driving as they may be hot. Oil and other fluids may also be hot.
- Do not leave anything that may burn easily, such as paper and rags, in the engine compartment.
- Do not smoke, cause sparks or expose an open flame to fuel or the battery. Fuel and battery fumes are flammable.
- Be extremely cautious when working on the battery. It contains poisonous and corrosive sulfuric acid.
- Take care because brake fluid can harm your hands or eyes and damage painted surfaces. If fluid gets on your hands or in your eyes, flush the affected area with clean water immediately.
  If you still experience discomfort, consult a doctor.

■ Safety glasses

Wear safety glasses to prevent flying or falling material, fluid spray, etc. from getting in your eyes.

NOTICE

■ If you remove the air cleaner filter

Driving with the air cleaner filter removed may cause excessive engine wear due to dirt in the air.

■ If the fluid level is low or high

It is normal for the brake fluid level to go down slightly as the brake pads wear or when the fluid level in the accumulator is high.
If the reservoir needs frequent refilling, it may indicate a serious problem.

Not for Reproduction

Hood

Release the lock from the inside of the vehicle to open the hood.

1 Pull the hood lock release lever.

The hood will pop up slightly.

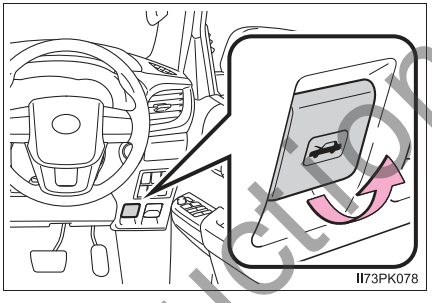

2 Pull up the auxiliary catch lever and lift the hood.

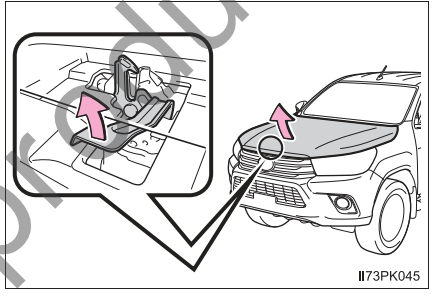

3 Hold the hood open by inserting the supporting rod into either of the slots.

Use the upper slots to open the hood normally, or use the lower slots when the hood needs to be opened wide.

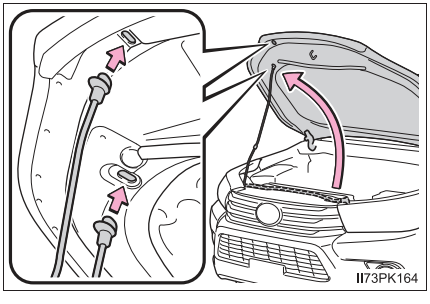

Not For Reproduction

WARNING

Pre-driving check

Check that the hood is fully closed and locked.
If the hood is not locked properly, it may open while the vehicle is in motion and cause an accident, which may result in death or serious injury.

After installing the support rod into the slot

Make sure the rod supports the hood securely from falling down on to your head or body.

NOTICE

When closing the hood

Be sure to return the support rod to its clip before closing the hood. Closing the hood with the support rod up could cause the hood to bend.

Not for Reproduction

Engine compartment

▶ 1GR-FE engine

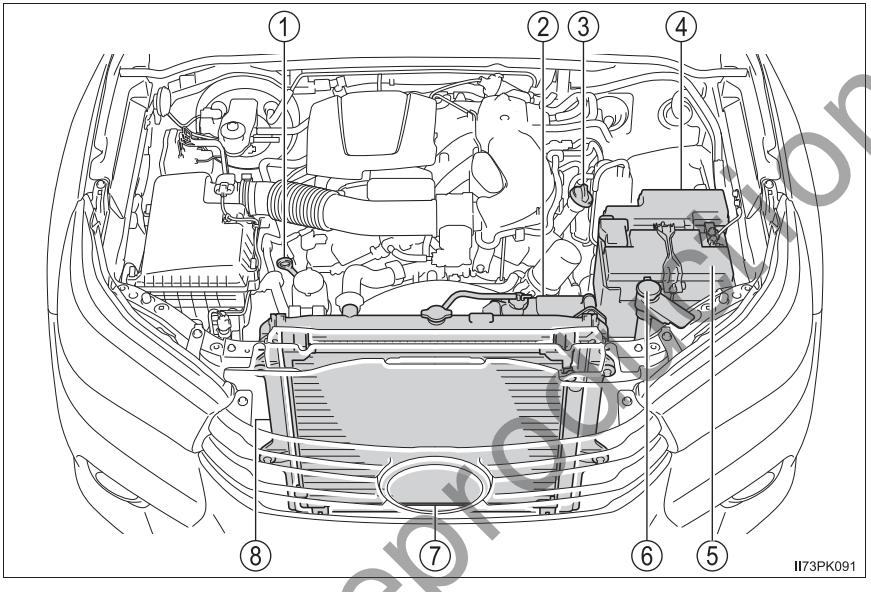

① Engine oil level dipstick (→P. 405)

② Engine coolant reservoir (→P. 408)

③ Engine oil filler cap (→P. 406)

④ Fuse box (→P. 428)

⑤ Battery (→P. 410)

⑥ Washer fluid tank (→P. 414)

⑦ Condenser (→P. 410)

⑧ Radiator (→P. 410)

Not for Reproduction

▶ 2TR-FE engine

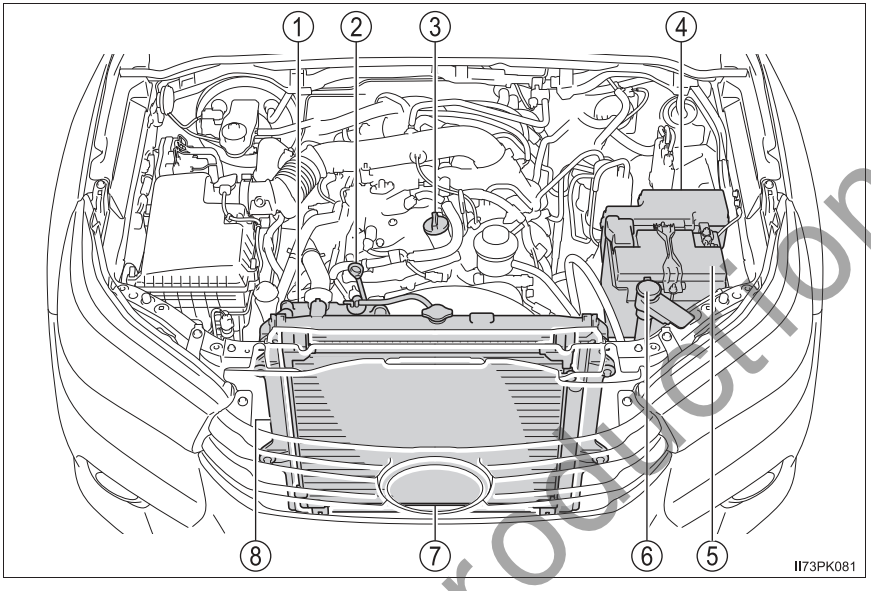

① Engine coolant reservoir (→P. 408)

② Engine oil level dipstick (→P. 405)

③ Engine oil filler cap (→P. 406)

④ Fuse box (→P. 428)

⑤ Battery (→P. 410)

⑥ Washer fluid tank (→P. 414)

⑦ Condenser (→P. 410)

⑧ Radiator (→P. 410)

Not for Reproduction

▶ 1GD-FTV and 2GD-FTV engines

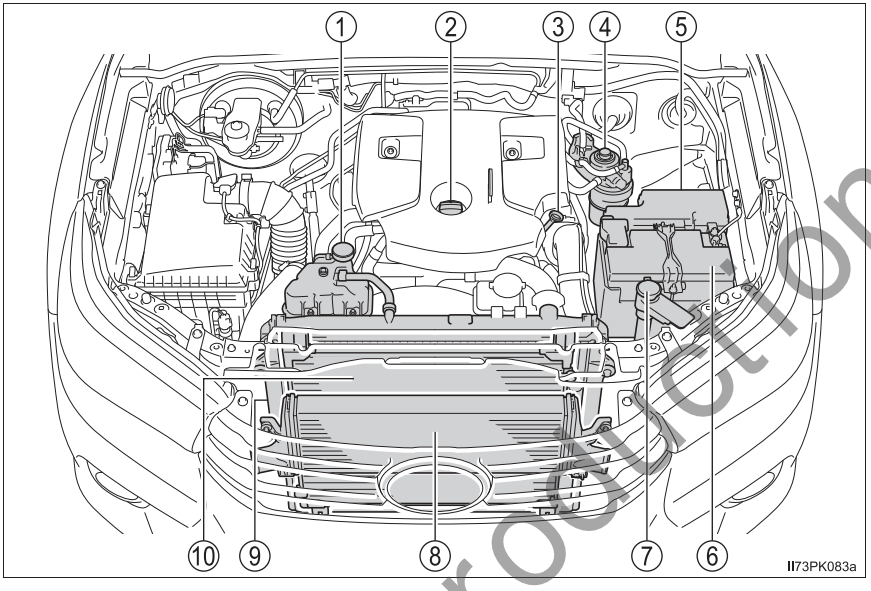

① Engine coolant reservoir (→P. 408)
② Engine oil filler cap (→P. 406)
③ Engine oil level dipstick (→P. 405)
④ Fuel filter (→P. 415, 503)
⑤ Fuse box (→P. 428)
⑥ Battery (→P. 410)
⑦ Washer fluid tank (→P. 414)
⑧ Intercooler (→P. 410)
⑨ Radiator (→P. 410)
⑩ Condenser (→P. 410)

Not for Reproduction

Engine oil

With the engine at operating temperature and turned off, check the oil level on the dipstick.

■ Checking the engine oil

1. Park the vehicle on level ground. After warming up the engine and turning it off, wait more than 5 minutes for the oil to drain back into the bottom of the engine.
2. Remove the sand and dust from around the dipstick.
3. Holding a rag under the end, pull the dipstick out.

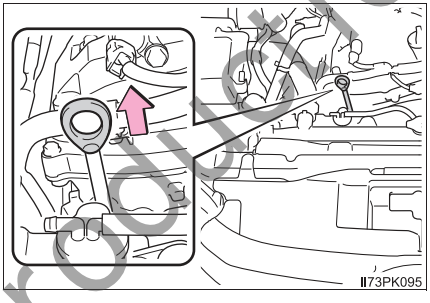

4. Wipe the dipstick clean.

   Make sure that the inlet of the oil level gauge guide and O-ring of the dipstick are free from sand and dust.
   If the O-ring is damaged, replace it with a new one.
5. Reinsert the dipstick fully.
6. Holding a rag under the end, pull the dipstick out and check the oil level.

   ① Low

   ② Normal

   ③ Excessive

   The shape of the dipstick may differ depending on the type of vehicle or engine.

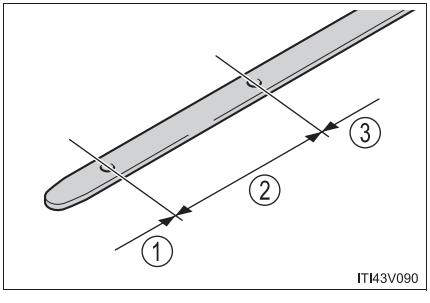

7. Wipe the dipstick and reinsert it fully.

Not for Reproduction

■ Adding engine oil

If the oil level is below or near the low level mark, add engine oil of the same type as that already in the engine.

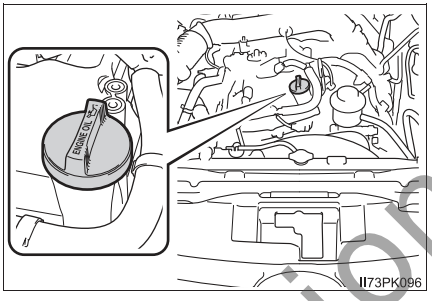

Make sure to check the oil type and prepare the items needed before adding oil.

Engine oil selection	→P. 514
Oil quantity (Low → Full)	1.5 L (1.6 qt., 1.3 Imp.qt.)
Items	Clean funnel

1. Remove the sand and dust from around the oil filler cap.
2. Remove the oil filler cap by turning it counterclockwise.
3. Add engine oil slowly, checking the dipstick.
4. Install the oil filler cap by turning it clockwise.

■ Engine oil consumption

A certain amount of engine oil will be consumed while driving. In the following situations, oil consumption may increase, and engine oil may need to be refilled in between oil maintenance intervals.

- When the engine is new, for example directly after purchasing the vehicle or after replacing the engine
- If low quality oil or oil of an inappropriate viscosity is used
- When driving at high engine speeds or with a heavy load, when towing, or when driving while accelerating or decelerating frequently
- When leaving the engine idling for a long time, or when driving frequently through heavy traffic

Not for Reproduction

WARNING

■ **Used engine oil**

- Used engine oil contains potentially harmful contaminants which may cause skin disorders such as inflammation and skin cancer, so care should be taken to avoid prolonged and repeated contact. To remove used engine oil from your skin, wash thoroughly with soap and water.
- Dispose of used oil and filters only in a safe and acceptable manner. Do not dispose of used oil and filters in household trash, in sewers or onto the ground. Call your Toyota dealer, service station or auto parts store for information concerning recycling or disposal.
- Do not leave used engine oil within the reach of children.

NOTICE

■ **To prevent serious engine damage**

Check the oil level on a regular basis.

■ **When replacing the engine oil**

- Be careful not to spill engine oil on the vehicle components.
- Avoid overfilling, or the engine could be damaged.
- Check the oil level on the dipstick every time you refill the vehicle.
- Be sure the engine oil filler cap is properly tightened.

Not for Reproduction

Engine coolant

The coolant level is satisfactory if it is between the “F” and “L” lines on the reservoir when the engine is cold.

▶ 1GR-FE engine

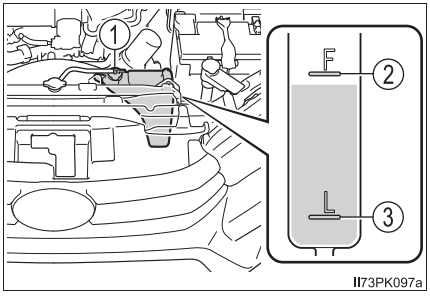

▶ 2TR-FE engine

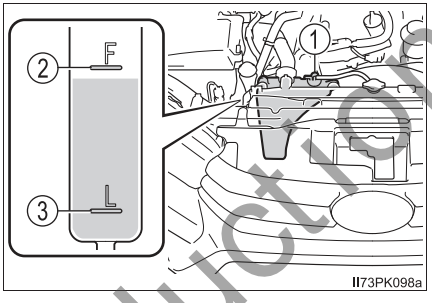

▶ 1GD-FTV and 2GD-FTV engines

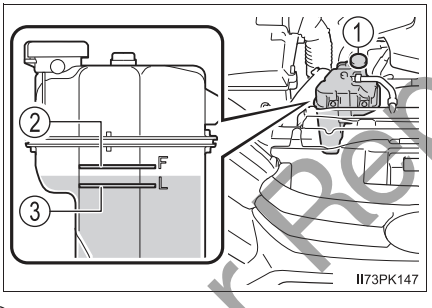

① Reservoir cap

② “F” line

③ “L” line

If the level is on or below the “L” line, add coolant up to the “F” line. (→P. 499)

Not for Reproduction

Coolant selection

Only use “Toyota Super Long Life Coolant” or a similar high quality ethylene glycol based non-silicate, non-amine, non-nitrite, and non-borate coolant with long-life hybrid organic acid technology.

“Toyota Super Long Life Coolant” is a mixture of 50% coolant and 50% deionized water. (Minimum temperature: -35°C [-31°F])

For more details about engine coolant, contact your Toyota dealer.

If the coolant level drops within a short time of replenishing

Visually check the radiator, hoses, engine coolant reservoir cap, drain cock and water pump. If you cannot find a leak, have your Toyota dealer test the cap and check for leaks in the cooling system.

WARNING

When the engine is hot

Do not remove the radiator cap or the coolant reservoir cap.
The cooling system may be under pressure and may spray hot coolant if the cap is removed, causing serious injuries, such as burns.

NOTICE

When adding coolant

Coolant is neither plain water nor straight antifreeze. The correct mixture of water and antifreeze must be used to provide proper lubrication, corrosion protection and cooling. Be sure to read the antifreeze or coolant label.

If you spill coolant

Be sure to wash it off with water to prevent it from damaging parts or paint.

Notice on coolant quality

Do not use improper coolant. If improper coolant is used, the engine cooling system may be damaged.

Not for Reproduction

Radiator, condenser and intercooler (if equipped)

Check the radiator, condenser and intercooler and clear away any foreign objects. If any of the above parts is extremely dirty or you are not sure of their condition, have your vehicle inspected by your Toyota dealer.

WARNING

When the engine is hot

Do not touch the radiator, condenser or intercooler as they may be hot and cause serious injuries, such as burns.

Battery

Check the battery as follows.

Battery exterior

Make sure that the battery terminals are not corroded and that there are no loose connections, cracks, or loose clamps.

① Terminals

② Hold-down clamp

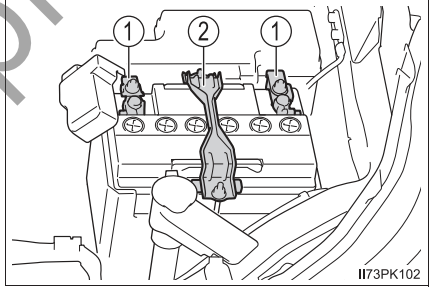

Not for Reproduction

■ Checking battery fluid

Check that the level is between the upper and lower lines.

① Upper line

② Lower line

If the fluid level is at or below the lower line, add distilled water.

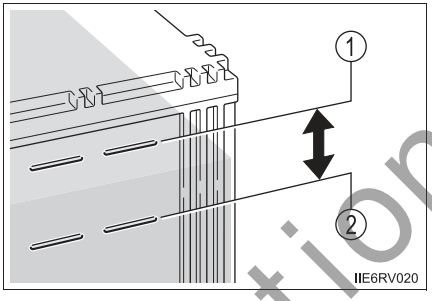

■ Adding distilled water

1 Remove the vent plug.

2 Add distilled water.

If the upper line cannot be seen, check the fluid level by looking directly at the cell.

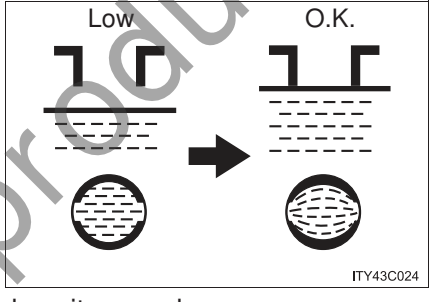

3 Put the vent plug back on and close it securely.

Not for Reproduction

■ **Before recharging**

When recharging, the battery produces hydrogen gas which is flammable and explosive. Therefore, observe the following before recharging:

- If recharging with the battery installed on the vehicle, be sure to disconnect the ground cable.
- Make sure the power switch on the charger is off when connecting and disconnecting the charger cables to the battery.

■ **After recharging/reconnecting the battery (vehicles with smart entry & start system)**

The engine may not start. Follow the procedure below to initialize the system.

1. Shift the shift lever to P (automatic transmission) or depress the brake pedal with the shift lever in N (manual transmission).
2. Open and close any of the doors.
3. Restart the engine.

- Unlocking the doors using the smart entry & start system may not be possible immediately after reconnecting the battery. If this happens, use the wireless remote control or the mechanical key to lock/unlock the doors.
- Start the engine with the engine switch in ACCESSORY mode. The engine may not start with the engine switch turned off. However, the engine will operate normally from the second attempt.
- The engine switch mode is recorded by the vehicle. If the battery is reconnected, the vehicle will return the engine switch mode to the status it was in before the battery was disconnected. Make sure to turn off the engine before disconnect the battery. Take extra care when connecting the battery if the engine switch mode prior to discharge is unknown.

If the system will not start even after multiple attempts, contact your Toyota dealer.

■ **If a symbol of a battery is shown on the multi-information display (if equipped)**

There is a malfunction in the vehicle's charging system.
Immediately stop the vehicle in a safe place and contact your Toyota dealer.
Continuing to drive the vehicle may be dangerous.

Not for Reproduction

WARNING

■ **Chemicals in the battery**

Batteries contain poisonous and corrosive sulfuric acid and may produce hydrogen gas which is flammable and explosive. To reduce the risk of death or serious injury, take the following precautions while working on or near the battery:

- Do not cause sparks by touching the battery terminals with tools.
- Do not smoke or light a match near the battery.
- Avoid contact with eyes, skin and clothes.
- Never inhale or swallow electrolyte.
- Wear protective safety glasses when working near the battery.
- Keep children away from the battery.

■ **Where to safely charge the battery**

Always charge the battery in an open area. Do not charge the battery in a garage or closed room where there is insufficient ventilation.

■ **Emergency measures regarding electrolyte**

- If electrolyte gets in your eyes
  Flush your eyes with clean water for at least 15 minutes and get immediate medical attention. If possible, continue to apply water with a sponge or cloth while traveling to the nearest medical facility.
- If electrolyte gets on your skin
  Wash the affected area thoroughly. If you feel pain or burning, get medical attention immediately.
- If electrolyte gets on your clothes
  It can soak through clothing on to your skin. Immediately take off the clothing and follow the procedure above if necessary.
- If you accidentally swallow electrolyte
  Drink a large quantity of water or milk. Get emergency medical attention immediately.
- When there is insufficient battery fluid
  Do not use if there is insufficient fluid in the battery. There is a possible danger that the battery may explode.

■ **When disconnecting the battery**

Do not disconnect the negative (-) terminal on the body. The disconnected negative (-) terminal may touch the positive (+) terminal, which may cause a short and result in death or serious injury.

Not for Reproduction

NOTICE

■ **When recharging the battery**

Never recharge the battery while the engine is running. Also, be sure all accessories are turned off.

■ **When adding distilled water**

Avoid overfilling. Water spilled during battery recharging may cause corrosion.

Washer fluid

If any washer does not work, the washer tank may be empty. Add washer fluid.

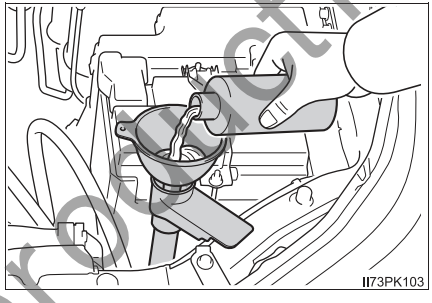

WARNING

■ **When adding washer fluid**

Do not add washer fluid when the engine is hot or running as washer fluid contains alcohol and may catch fire if spilled on the engine etc.

NOTICE

■ **Do not use any fluid other than washer fluid**

Do not use soapy water or engine antifreeze instead of washer fluid.
Doing so may cause streaking on the vehicle's painted surfaces as well as damaging the pump leading to problems of the washer fluid not spraying.

■ **Diluting washer fluid**

Dilute washer fluid with water as necessary.
Refer to the freezing temperatures listed on the label of the washer fluid bottle.

Not for Reproduction

Fuel filter (diesel engine only)

You may drain the fuel filter yourself. However, as the operation is difficult, we recommend having it drained by your Toyota dealer. Even if you decide to drain it yourself, contact your Toyota dealer.

The water in the fuel filter needs to be drained if one of the following symptoms occurs:

- Vehicles without multi-information display
  When the fuel system warning light flashes and a buzzer sounds. (→P. 463)
- Vehicles with multi-information display
  When "WATER ACCUMULATION IN FUEL FILTER SEE OWNER'S MANUAL"/"Water accumulation in fuel filter See owner's manual" is shown on the multi-information display and a buzzer sounds.

1. Vehicles without smart entry & start system: Turn the engine switch to the "LOCK" position.

   Vehicles with smart entry & start system: Turn the engine switch off.
2. Place a small tray under the drain plug or drain hose to catch the water and any fuel that comes out.
3. Perform the draining as shown in the illustration.

   ① Turn the drain plug counterclockwise about 2 to 2 1/2 turns.

   Loosening more than this will cause water oozing from around the drain plug.

   ② Operate the priming pump until fuel begins to run out.

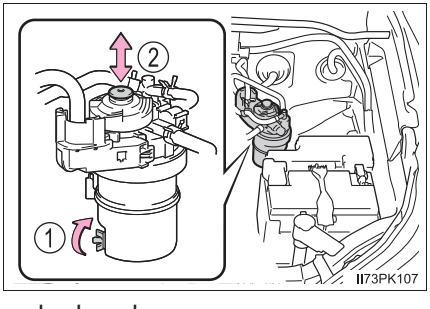

4. After draining, tighten the drain plug by hand.

Not for Reproduction

Tires

Replace or rotate tires in accordance with maintenance schedules and treadwear.

Checking tires

Check if the treadwear indicators are showing on the tires. Also check the tires for uneven wear, such as excessive wear on one side of the tread.
Check the spare tire condition and pressure if not rotated.

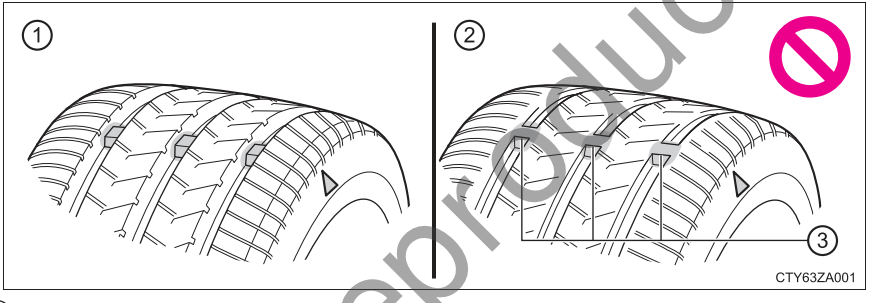

① New tread

② Worn tread

③ Treadwear indicator

The location of treadwear indicators is shown by a “TWI” or “Δ” mark, etc., molded into the sidewall of each tire.
Replace the tires if the treadwear indicators are showing on a tire.

Not for Reproduction

Tire rotation

Rotate the tires in the order shown.

- ▶ Vehicles with spare tire of a different wheel type from the installed tires
- ▶ Vehicles with spare tire of the same wheel type as the installed tires

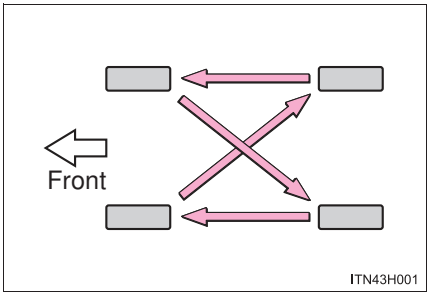

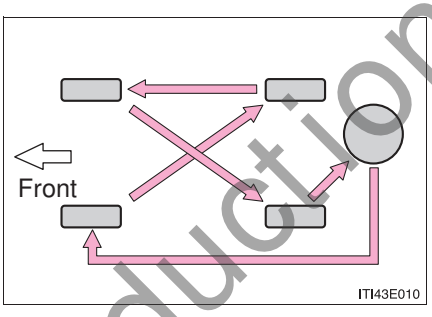

To equalize tire wear and help extend tire life, Toyota recommends that tire rotation is carried out approximately every 10000 km (6000 miles).

■ When to replace your vehicle's tires

Tires should be replaced if:

- ● The treadwear indicators are showing on a tire.
- ● You have tire damage such as cuts, splits, cracks deep enough to expose the fabric, and bulges indicating internal damage
- ● A tire goes flat repeatedly or cannot be properly repaired due to the size or location of a cut or other damage

If you are not sure, consult with your Toyota dealer.

■ Tire life

Any tire over 6 years old must be checked by a qualified technician even if it has seldom or never been used or damage is not obvious.

■ If the tread on snow tires wears down below 4 mm (0.16 in.)

The effectiveness of the tires as snow tires is lost.

Not for Reproduction

WARNING

When inspecting or replacing tires

Observe the following precautions to prevent accidents.
Failure to do so may cause damage to parts of the drive train as well as dangerous handling characteristics, which may lead to an accident resulting in death or serious injury.

- Do not mix tires of different makes, models or tread patterns.
  Also, do not mix tires of remarkably different treadwear.
- Do not use tire sizes other than those recommended by Toyota.
- Do not mix differently constructed tires (radial, bias-belted or bias-ply tires).
- Do not mix summer, all season and snow tires.
- Do not use tires that have been used on another vehicle.
  Do not use tires if you do not know how they were used previously.

NOTICE

Driving on rough roads

Take particular care when driving on roads with loose surfaces or potholes. These conditions may cause losses in tire inflation pressure, reducing the cushioning ability of the tires. In addition, driving on rough roads may cause damage to the tires themselves, as well as the vehicle's wheels and body.

If tire inflation pressure of each tire becomes low while driving

Do not continue driving, or your tires and/or wheels may be ruined.

Not for Reproduction

Tire inflation pressure

Make sure to maintain proper tire inflation pressure. Tire inflation pressure should be checked at least once per month. However, Toyota recommends that tire inflation pressure be checked once every two weeks. (→P. 524)

■ Effects of incorrect tire inflation pressure

Driving with incorrect tire inflation pressure may result in the following:

- Reduced fuel economy
- Reduced driving comfort and poor handling
- Reduced tire life due to wear
- Reduced safety
- Damage to the drive train

If a tire needs frequent inflating, have it checked by your Toyota dealer.

■ Instructions for checking tire inflation pressure

When checking tire inflation pressure, observe the following:

- Check only when the tires are cold.
  If your vehicle has been parked for at least 3 hours or has not been driven for more than 1.5 km or 1 mile, you will get an accurate cold tire inflation pressure reading.
- Always use a tire pressure gauge.
  It is difficult to judge if a tire is properly inflated based only on its appearance.
- It is normal for the tire inflation pressure to be higher after driving as heat is generated in the tire. Do not reduce tire inflation pressure after driving.
- Passengers and luggage weight should be placed so that the vehicle is balanced.

Not for Reproduction

WARNING

■ Proper inflation is critical to save tire performance

Keep your tires properly inflated.
If the tires are not properly inflated, the following conditions may occur which could lead to an accident resulting in death or serious injury:

- Excessive wear
- Uneven wear
- Poor handling
- Possibility of blowouts resulting from overheated tires
- Air leaking from between tire and wheel
- Wheel deformation and/or tire damage
- Greater possibility of tire damage while driving (due to road hazards, expansion joints, sharp edges in the road, etc.)

NOTICE

■ When inspecting and adjusting tire inflation pressure

Be sure to put the tire valve caps back on.
If a valve cap is not installed, dirt or moisture may get into the valve and cause an air leak, resulting in decreased tire inflation pressure.

Not for Reproduction

Wheels

If a wheel is bent, cracked or heavily corroded, it should be replaced. Otherwise, the tire may separate from the wheel or cause a loss of handling control.

Wheel selection

When replacing wheels, care should be taken to ensure that they are equivalent to those removed in load capacity, diameter, rim width and inset*.
Replacement wheels are available at your Toyota dealer.

*: Conventionally referred to as “offset”.

Toyota does not recommend using the following:

- Wheels of different sizes or types
- Used wheels
- Bent wheels that have been straightened

Aluminum wheel precautions (if equipped)

- Use only Toyota wheel nuts and wrenches designed for use with your aluminum wheels.
- When rotating, repairing or changing your tires, check that the wheel nuts are still tight after driving 1600 km (1000 miles).
- Be careful not to damage the aluminum wheels when using tire chains.
- Use only Toyota genuine balance weights or equivalent and a plastic or rubber hammer when balancing your wheels.

Not for Reproduction

WARNING

■ **When replacing wheels**

- Do not use wheels that are a different size from those recommended in the Owner's Manual, as this may result in a loss of handling control.
- Never use an inner tube in a leaking wheel which is designed for a tubeless tire. Doing so may result in an accident, causing death or serious injury.

■ **When installing the wheel nuts**

- Be sure to install the wheel nuts with the tapered ends facing inward. Installing the nuts with the tapered ends facing outward can cause the wheel to break and eventually cause the wheel to come off while driving, which could lead to an accident resulting in death or serious injury.

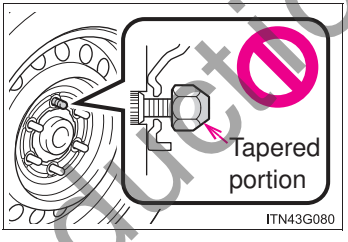

- Never use oil or grease on the wheel bolts or wheel nuts.
  Oil and grease may cause the wheel nuts to be excessively tightened, leading to bolt or disc wheel damage. In addition, the oil or grease can cause the wheel nuts to loosen and the wheel may fall off, causing an accident and resulting in death or serious injury. Remove any oil or grease from the wheel bolts or wheel nuts.

■ **Use of defective wheels prohibited**

Do not use cracked or deformed wheels.
Doing so could cause the tire to leak air during driving, possibly causing an accident.

Not for Reproduction

Air conditioning filter

The air conditioning filter must be changed regularly to maintain air conditioning efficiency.

Removal method

1 Vehicles without smart entry & start system: Turn the engine switch to the “LOCK” position.
Vehicles with smart entry & start system: Turn the engine switch off.

2 Open the glove box. Turn the claws as shown in the illustration.

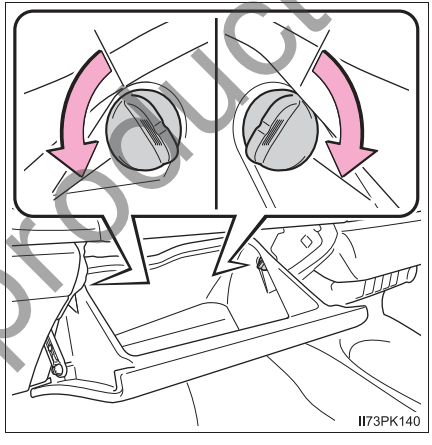

3 Pull out the claws.

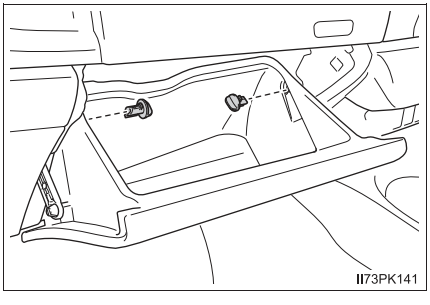

Not for Reproduction

4 Pull out the damper (if equipped) as shown in the illustration, and then remove the glove box.

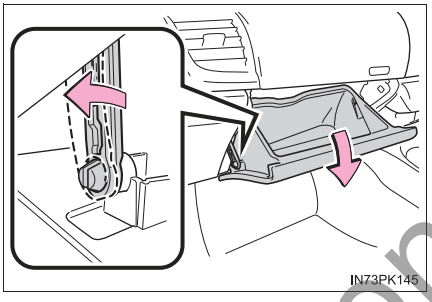

5 Remove the filter cover.

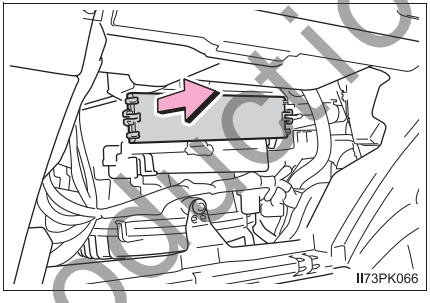

6 Remove the air conditioning filter and replace it with a new one.

The "↑UP" marks shown on the filter should be pointing up interval

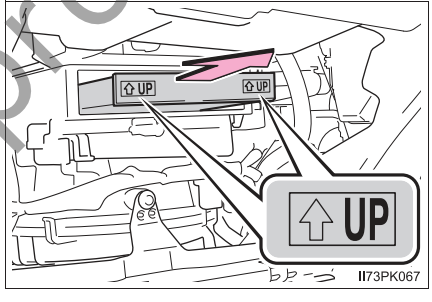

■ **Changing interval**

Inspect and replace the air conditioning filter according to the maintenance schedule. In dusty areas or areas with heavy traffic flow, early replacement may be required. (For scheduled maintenance information, please refer to the "Warranty and Service Booklet".)

■ **If air flow from the vents decreases dramatically**

The filter may be clogged. Check the filter and replace if necessary.

⚠ NOTICE

■ **When using the air conditioning system**

Make sure that a filter is always installed.
Using the air conditioning system without a filter may cause damage to the system.

Not for Reproduction

Wireless remote control/electronic key battery*

Replace the battery with a new one if it is depleted.

You will need the following items:

- Flathead screwdriver
- Small flathead screwdriver
- Lithium battery

  Vehicles without smart entry & start system: CR1620

  Vehicles with smart entry & start system: CR2032

Replacing the battery

▶ Vehicles without smart entry & start system

1 Remove the cover.

To prevent damage to the key, cover the tip of the screwdriver with a rag.

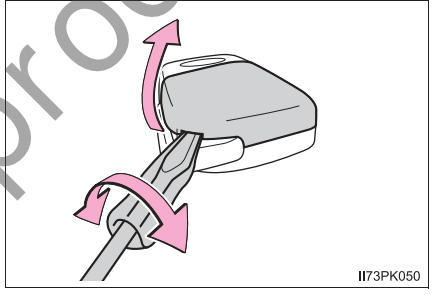

2 Remove the battery cover.

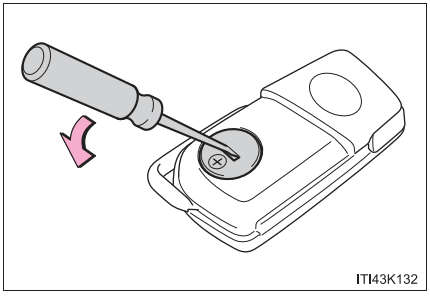

Not for Reproduction

*: If equipped

3 Remove the depleted battery.

Insert a new battery with the “+” terminal facing up.

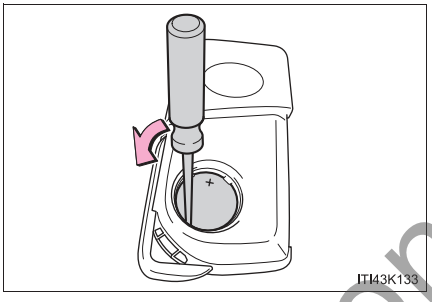

▶ Vehicles with smart entry & start system

1 Take out the mechanical key.

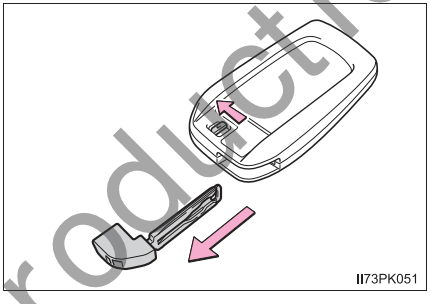

2 Remove the cover.

To prevent damage to the key, cover the tip of the screwdriver with a rag.

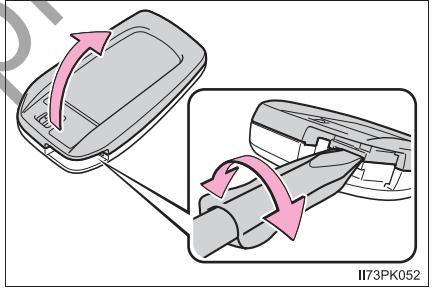

3 Remove the depleted battery.

Insert a new battery with the “+” terminal facing up.

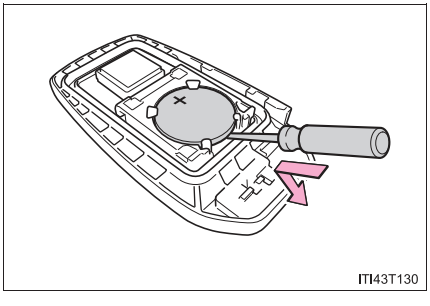

Not for Reproduction

Use a lithium battery

Vehicles without smart entry & start system: CR1620

Vehicles with smart entry & start system: CR2032

- Batteries can be purchased at your Toyota dealer, local electrical appliance shops or camera stores.
- Replace only with the same or equivalent type recommended by the manufacturer.
- Dispose of used batteries according to local laws.

If the key battery is depleted

The following symptoms may occur:

- The smart entry & start system (if equipped) and wireless remote control will not function properly.
- The operational range will be reduced.

WARNING

Removed battery and other parts

These parts are small and if swallowed by a child, they can cause choking. Keep away from children. Failure to do so could result in death or serious injury.

NOTICE

For normal operation after replacing the battery

Observe the following precautions to prevent accidents:

- Always work with dry hands.
  Moisture may cause the battery to rust.
- Do not touch or move any other component inside the remote control.
- Do not bend either of the battery terminals.

Not for Reproduction

Checking and replacing fuses

If any of the electrical components do not operate, a fuse may have blown. If this happens, check and replace the fuses as necessary.

1 Vehicles without smart entry & start system:
Turn the engine switch to the “LOCK” position.

Vehicles with smart entry & start system:
Turn the engine switch off.

2 Open the fuse box cover.

▶ In the engine compartment

Push the tab in and pull the lock release, and lift the lid off.

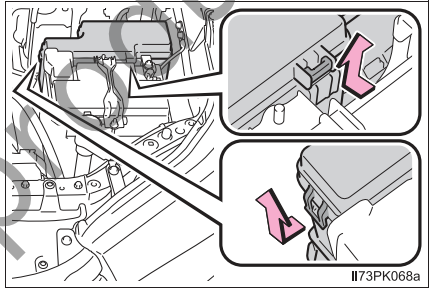

▶ Under the instrument panel

Remove the cover (if equipped).

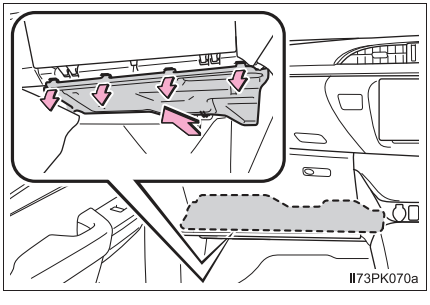

Not for Reproduction

Remove the lid.

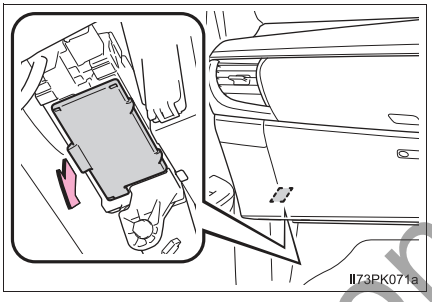

▶ Behind the instrument panel

Remove the glove box (→P. 423), and remove the lid.

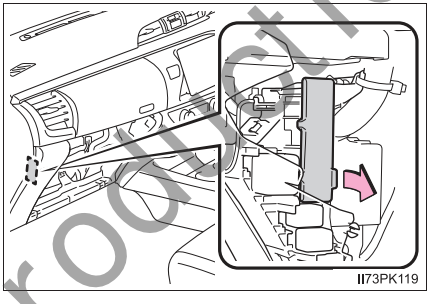

▶ Behind the cowl side panel

Remove the front passenger's door scuff plate.

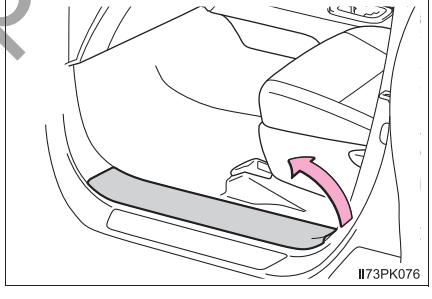

Not for Reproduction

Remove the nut and the cowl side panel.

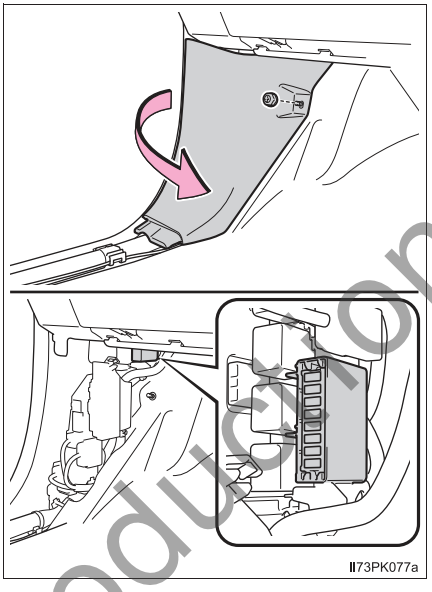

3 Remove the fuse.

Only type A fuse can be removed using the pullout tool.

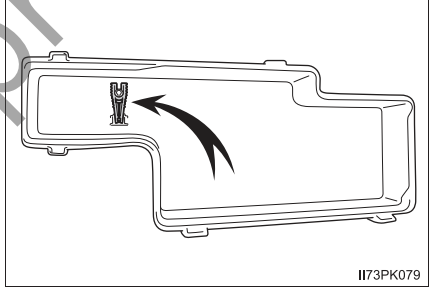

Not for Reproduction

4 Check if the fuse is blown.

① Normal fuse

② Blown fuse

Type A, B, C and D:
Replace the blown fuse with a new fuse of an appropriate amperage rating. The amperage rating can be found on the fuse box lid.

Type E:
Contact your Toyota dealer.

▶ Type A

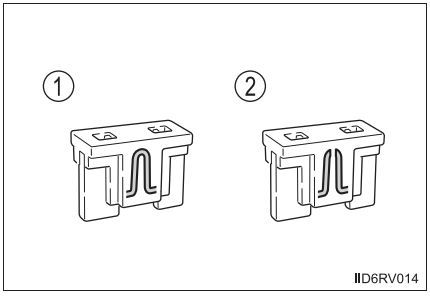

▶ Type B

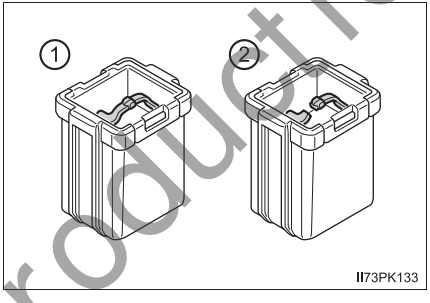

▶ Type C

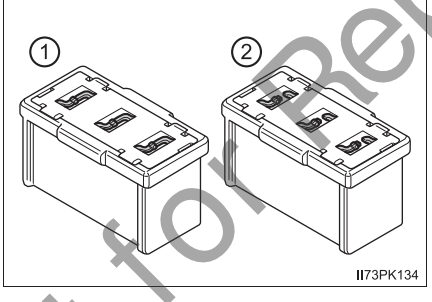

▶ Type D

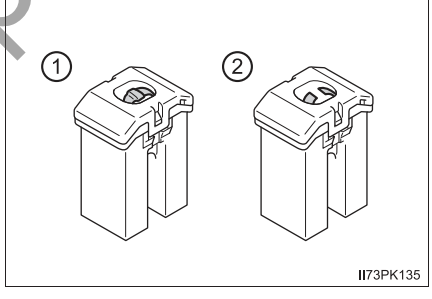

▶ Type E

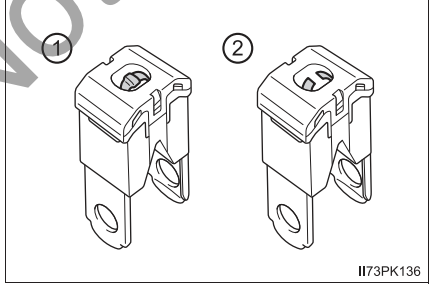

Not for Reproduction

After a fuse is replaced

- If the lights do not turn on even after the fuse has been replaced, a bulb may need replacement. (→P. 433)
- If the replaced fuse blows again, have the vehicle inspected by your Toyota dealer.

If there is an overload in a circuit

The fuses are designed to blow, protecting the wiring harness from damage.

WARNING

To prevent system breakdowns and vehicle fire

Observe the following precautions.
Failure to do so may cause damage to the vehicle, and possibly a fire or injury.

- Never use a fuse of a higher amperage rating than that indicated, or use any other object in place of a fuse.
- Always use a genuine Toyota fuse or equivalent.
  Never replace a fuse with a wire, even as a temporary fix.
- Do not modify the fuses or fuse boxes.

NOTICE

Before replacing fuses

Have the cause of electrical overload determined and repaired by your Toyota dealer as soon as possible.

Not for Reproduction

Light bulbs

You may replace the following bulbs by yourself. The difficulty level of replacement varies depending on the bulb. As there is a danger that components may be damaged, we recommend that replacement is carried out by your Toyota dealer.

Preparing for light bulb replacement

Check the wattage of the light bulb to be replaced. (→P. 526)

Bulb locations

■ Front

▶ Vehicles with halogen headlights

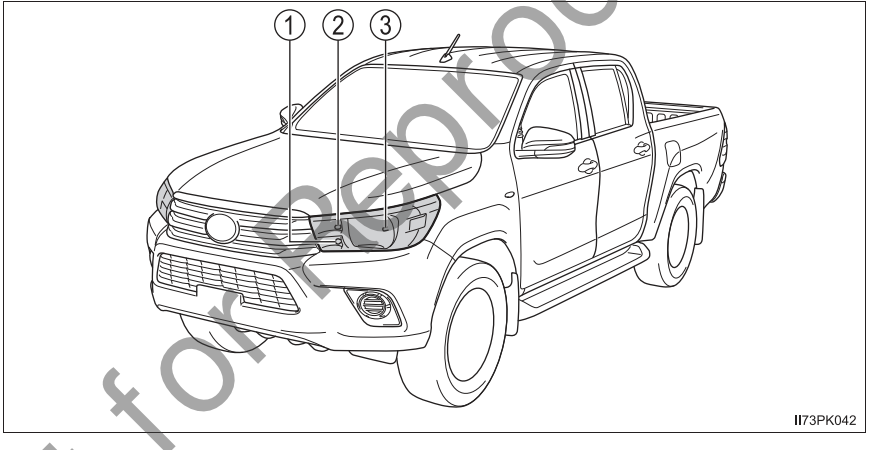

① Front turn signal light

② Front position light/daytime running light

③ Headlight

Not for Reproduction

▶ Vehicles with LED headlights

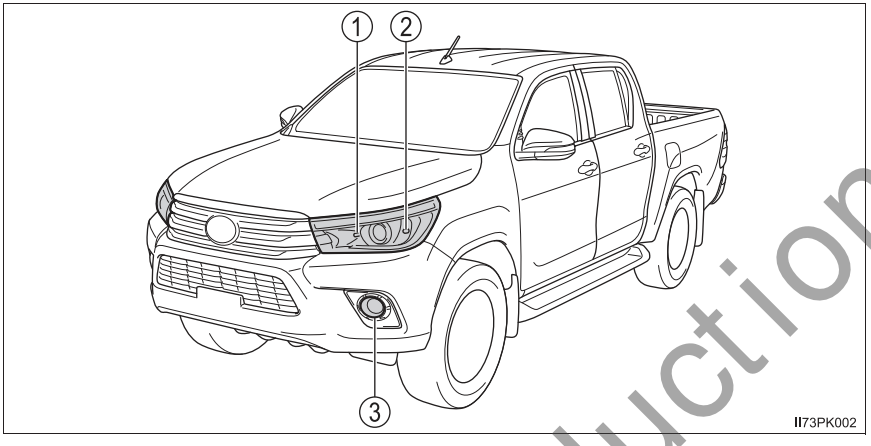

① Headlight (high beam)
② Front turn signal light
③ Halogen fog light*

*: If equipped

■ **Rear**

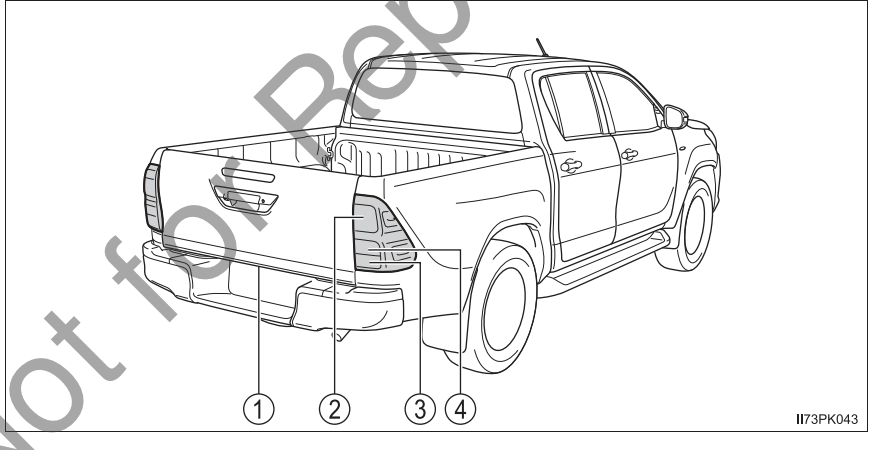

① License plate light
② Stop/tail light
③ Back up light
④ Rear turn signal light

Not for Reproduction

Replacing light bulbs

■ Headlight high/low beams (vehicles with halogen headlights)

1 Unplug the connector and remove the rubber cover.

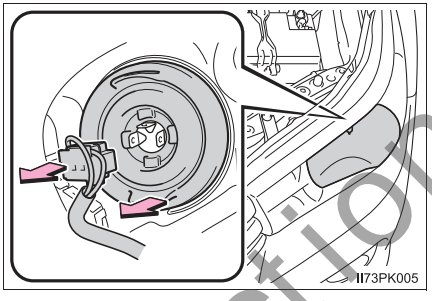

2 Release the bulb retaining spring.

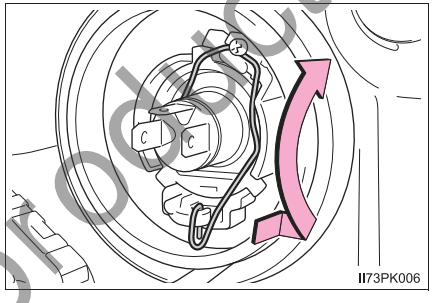

3 Remove the bulb.

To install a new bulb, align the tabs of the bulb with the cutouts of the mounting hole.

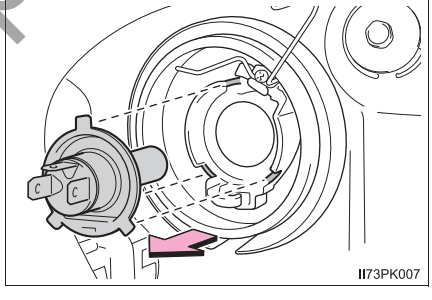

4 When installing, reverse the steps listed.

Not for Reproduction

■ Headlight high beams (vehicles with LED headlights)

1 Unplug the connector while depressing the lock release.

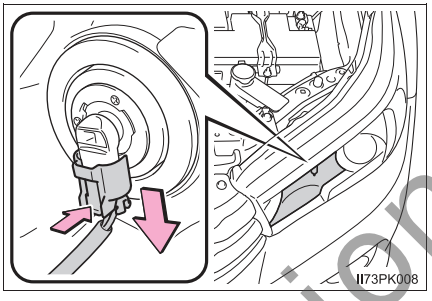

2 Turn the bulb base counter-clockwise.

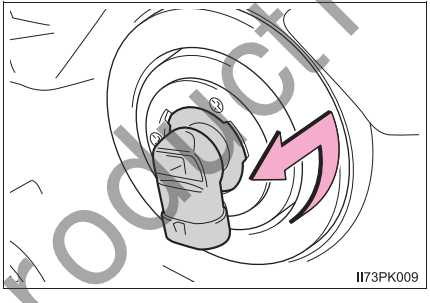

3 Replace the light bulb, and install the bulb base.

Align the 3 tabs on the light bulb with the mounting, and insert.

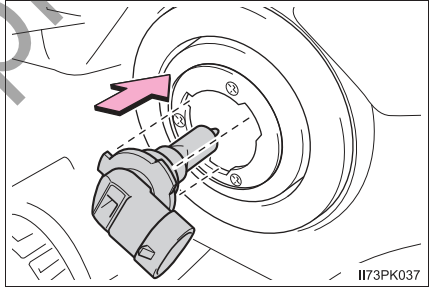

4 Turn and secure the bulb base.

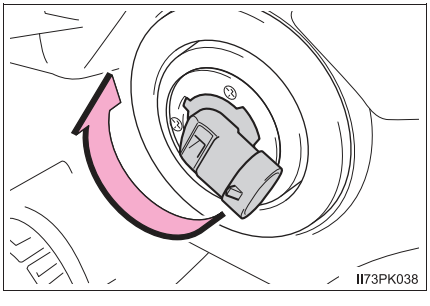

Not for Reproduction

5 Install the connector

Shake the bulb base gently to check that it is not loose, turn the headlight high beams on once and visually confirm that no light is leaking through the mounting.

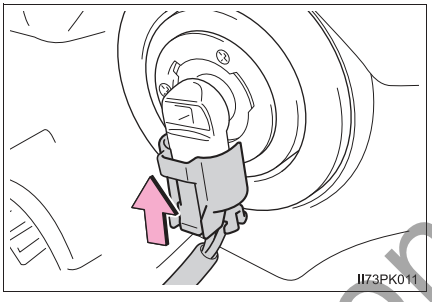

■ Front position lights/daytime running lights (vehicles with halogen headlights)

1 Turn the bulb base counterclockwise.

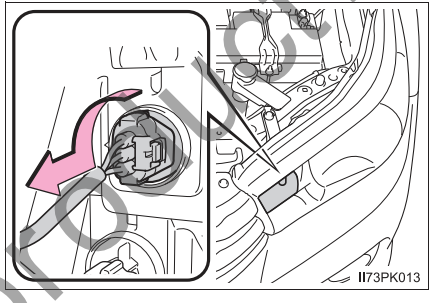

2 Remove the light bulb.

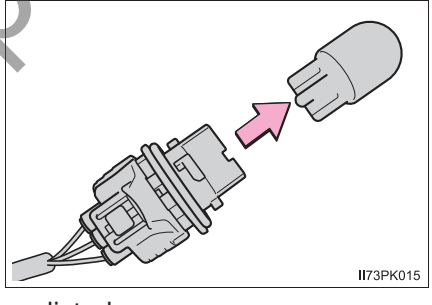

3 When installing, reverse the steps listed.

Not for Reproduction

■ Front turn signal lights

▶ Vehicles with halogen headlights

1 Turn the bulb base counter-clockwise.

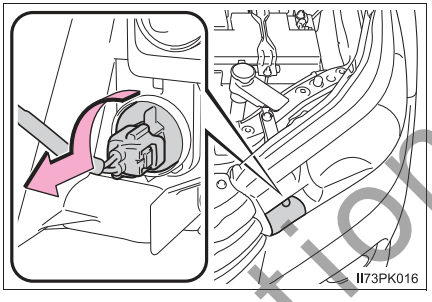

2 Remove the light bulb.

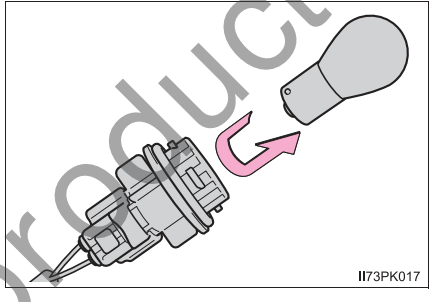

3 When installing, reverse the steps listed.

Not for Reproduction

▶ Vehicles with LED headlights

1 To allow enough working space, turn the steering wheel to the opposite side where the bulb to be replaced is located.

Remove the screws and clips.

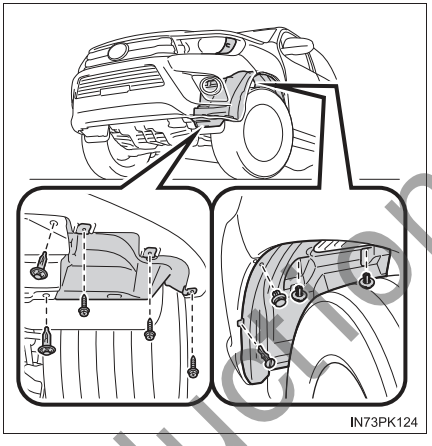

① Removing the clip

② Installing the clip

▶ Type A

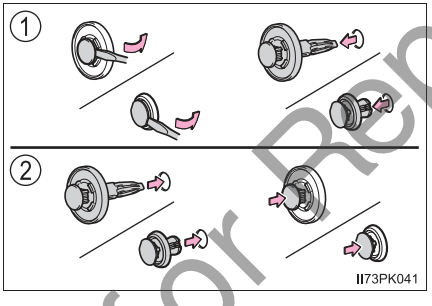

▶ Type B

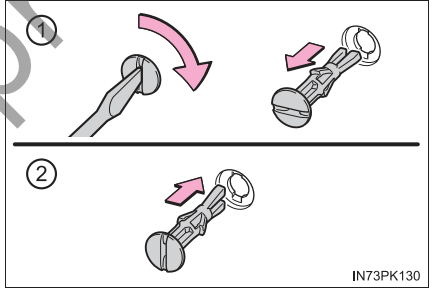

Not for Reproduction

2 Partly remove the fender liner and turn the bulb base counterclockwise.

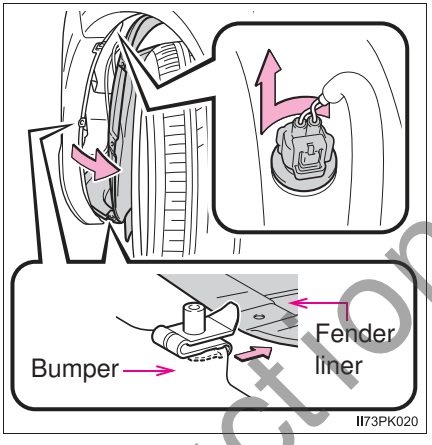

3 Remove the light bulb.

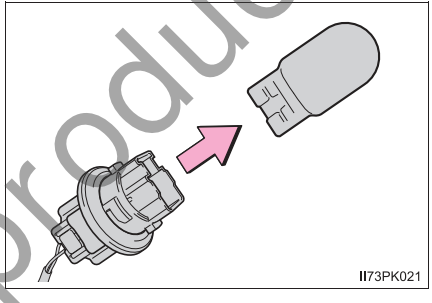

4 When installing, reverse the steps listed.

Not for Reproduction

■ Halogen fog lights (if equipped)

1 To allow enough working space, turn the steering wheel to the opposite side where the bulb to be replaced is located.

Remove the screws and clips.

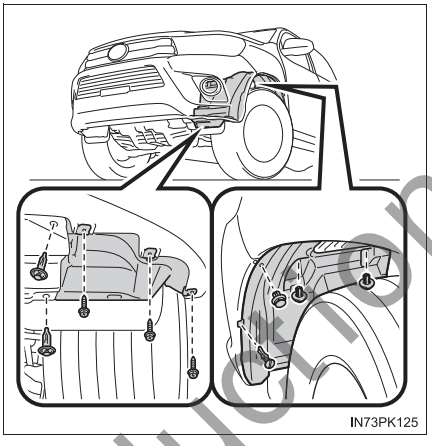

① Removing the clip

② Installing the clip

▶ Type A

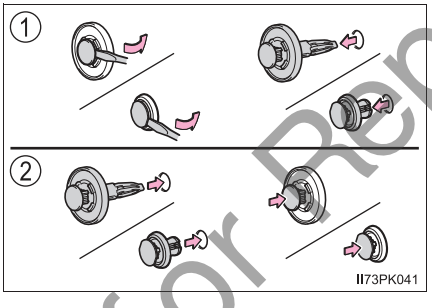

▶ Type B

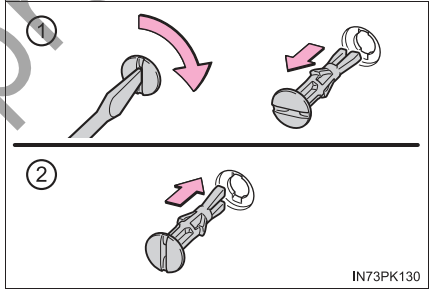

Not for Reproduction

2 Partly remove the fender liner and unplug the connector while pressing the lock release.

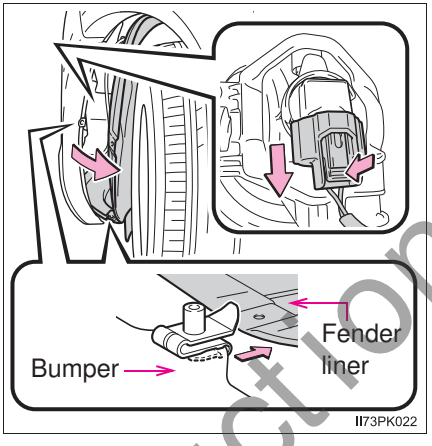

3 Turn the bulb base counterclockwise.

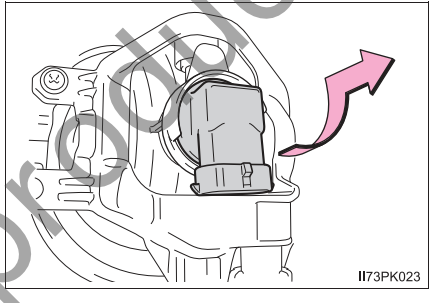

4 Replace the light bulb, and install the bulb base.

Align the 3 tabs on the light bulb with the mounting, and insert.

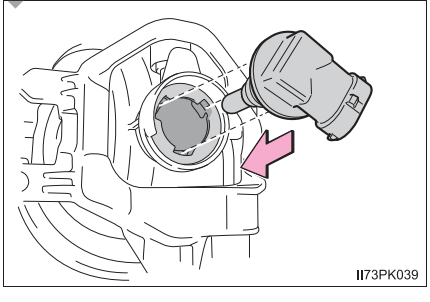

Not for Reproduction

5 Turn the secure the bulb base.

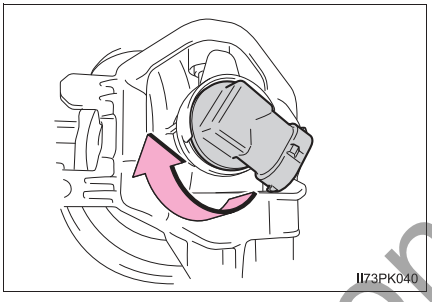

6 Install the connector.

Shake the bulb base gently to check that it is not loose, turn the fog lights on once and visually confirm that no light is leaking through the mounting.

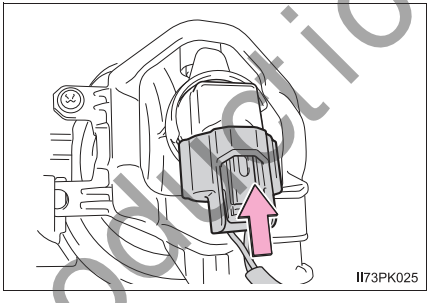

7 When installing the fender liner, screws and clips, reverse the removing procedure in steps 1 and 2.

Not for Reproduction

■ Stop/tail lights, rear turn signal lights and back-up lights

1 Remove the securing bolts and pull the unit sideways to remove.

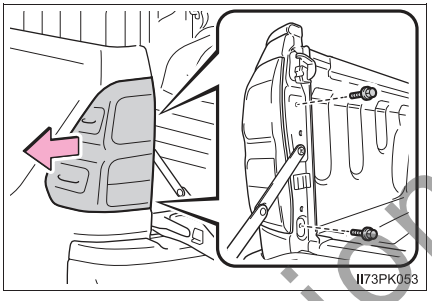

2 Turn the bulb base counter-clockwise.

① Stop/tail light

② Rear turn signal light

③ Back-up light

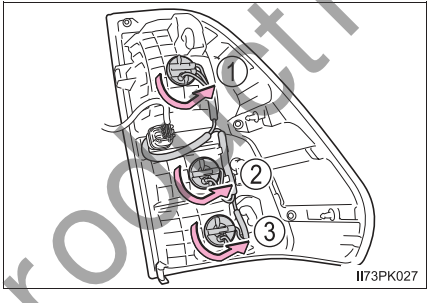

3 Remove the light bulb.

① Stop/tail light

② Rear turn signal light

③ Back-up light

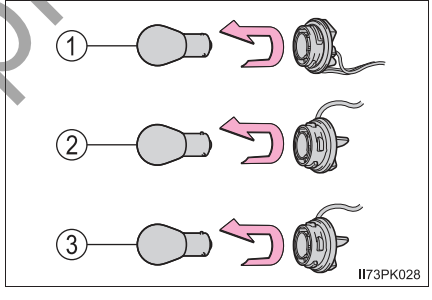

4 When installing, reverse the steps listed.

Not for Reproduction

■ License plate light

1 Remove the unit.

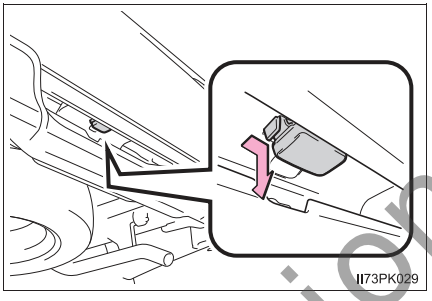

2 Turn the bulb base counter-clockwise.

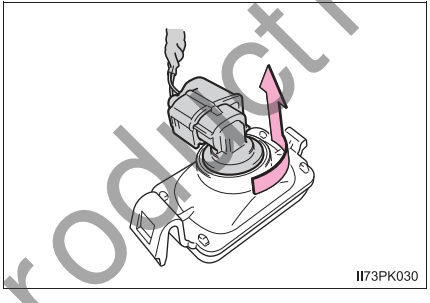

3 Remove the light bulb.

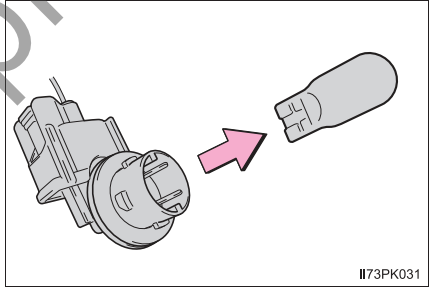

4 When installing, reverse the steps listed.

Not for Reproduction

■ Replacing the following bulbs

If any of the lights listed below has burnt out, have it replaced by your Toyota dealer.

- Headlight low beams (vehicles with LED headlights)
- Front position lights/daytime running lights (vehicles with LED headlights)
- Side turn signal lights
- LED fog lights (if equipped)
- High mounted stoplight (if equipped)

■ When installing the rubber cover of the headlight (vehicles with halogen headlights)

Ensure the rubber cover is securely attached.

① Fit the rubber cover outer circumference in firmly.

② Fit the rubber cover around the light bulb in until the light bulb plug can be seen.

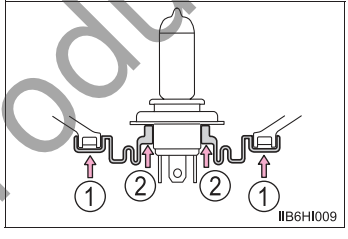

■ LED lights

The headlight low beams (vehicles with LED headlights), front position lights/daytime running lights (vehicles with LED headlights), side turn signal lights (mirror mounted type), LED fog lights (if equipped) and high mounted stoplight (if equipped) consists of a number of LEDs. If any of the LEDs burn out, take your vehicle to your Toyota dealer to have the light replaced.

■ Condensation build-up on the inside of the lens

Temporary condensation build-up on the inside of the headlight lens does not indicate a malfunction. Contact your Toyota dealer for more information in the following situations:

- Large drops of water have built up on the inside of the lens.
- Water has built up inside the headlight.

Not for Reproduction

WARNING

■ **Replacing light bulbs**

- Turn off the lights. Do not attempt to replace the bulb immediately after turning off the lights.
  The bulbs become very hot and may cause burns.
- Do not touch the glass portion of the light bulb with bare hands. When it is unavoidable to hold the glass portion, use and hold with a clean dry cloth to avoid getting moisture and oils on the bulb.
  Also, if the bulb is scratched or dropped, it may blow out or crack.
- Fully install light bulbs and any parts used to secure them. Failure to do so may result in heat damage, fire, or water entering the headlight unit. This may damage the headlights or cause condensation to build up on the lens.
- Do not attempt to repair or disassemble light bulbs, connectors, electric circuits or component parts.
  Doing so may result in death or serious injury due to electric shock.

■ **To prevent damage or fire**

- Make sure bulbs are fully seated and locked.
- Check the wattage of the bulb before installing to prevent heat damage.

Not for Reproduction

Not for Reproduction

When trouble arises 8

8-1. Essential information

Emergency flashers.....450

If your vehicle has to be stopped in an emergency.....451

8-2. Steps to take in an emergency

If your vehicle needs to be towed.....453

If you think something is wrong.....459

Fuel pump shut off system (gasoline engine only).....460

If a warning light turns on or a warning buzzer sounds.....461

If a warning message is displayed 469

If you have a flat tire 474

If the engine will not start.....488

If the electronic key does not operate properly (vehicles with smart entry & start system).....490

If the vehicle battery is discharged.....494

If your vehicle overheats....499

If you run out of fuel and the engine stalls (diesel engine only) 503

If the vehicle becomes stuck 504

Not for Reproduction

Emergency flashers

The emergency flashers are used to warn other drivers when the vehicle has to be stopped in the road due to a breakdown, etc.

Press the switch.

All the turn signal lights will flash.
To turn them off, press the switch once again.

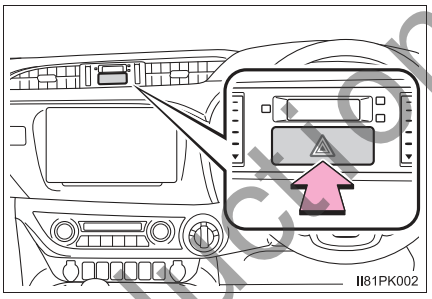

■ **Emergency flashers**

If the emergency flashers are used for a long time while the engine is not operating, the battery may discharge.

Not for Reproduction

If your vehicle has to be stopped in an emergency

Only in an emergency, such as if it becomes impossible to stop the vehicle in the normal way, stop the vehicle using the following procedure:

1. Steadily step on the brake pedal with both feet and firmly depress it.

   Do not pump the brake pedal repeatedly as this will increase the effort required to slow the vehicle.

2. Shift the shift lever to N.

▶ If the shift lever is shifted to N

3. After slowing down, stop the vehicle in a safe place by the road.
4. Stop the engine.

▶ If the shift lever cannot be shifted to N

3. Keep depressing the brake pedal with both feet to reduce vehicle speed as much as possible.
4. Vehicles without smart entry & start system:

   Stop the engine by turning the engine switch to the “ACC” position.

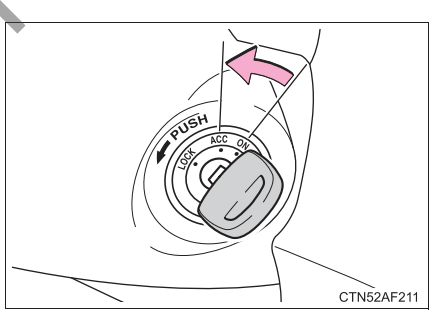

CTN52AF211

   Vehicles with smart entry & start system:

   To stop the engine, press and hold the engine switch for 2 consecutive seconds or more, or press it briefly 3 times or more in succession.

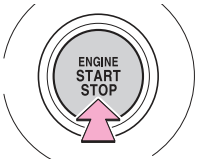

Press and hold for 2 seconds or more, or press briefly 3 times or more

IIE7RV009

5. Stop the vehicle in a safe place by the road.

Not for Reproduction

WARNING

■ **If the engine has to be turned off while driving**

- Power assist for the brakes and steering wheel will be lost, making the brake pedal harder to depress and the steering wheel heavier to turn. Decelerate as much as possible before turning off the engine.
- Vehicles without smart entry & start system: Never attempt to remove the key, as doing so will lock the steering wheel.

Not for Reproduction

If your vehicle needs to be towed

If towing is necessary, we recommend having your vehicle towed by your Toyota dealer or commercial towing service, using a wheel-lift type truck or flatbed truck.
Use a safety chain system for all towing, and abide by all state/provincial and local laws.

Situations when it is necessary to contact dealers before towing

The following may indicate a problem with your transmission. Contact your Toyota dealer or commercial towing service before towing.

- The engine is running but the vehicle does not move.
- The vehicle makes an abnormal sound.

Towing with a sling-type truck

Do not tow with a sling-type truck to prevent body damage.

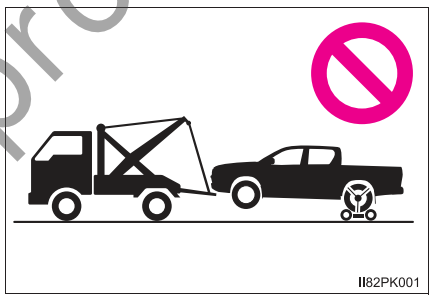

Not for Reproduction

Towing with a wheel-lift type truck

▶ From the front

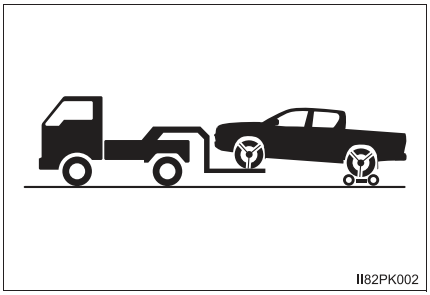

Use a towing dolly under the rear wheels.

▶ From the rear

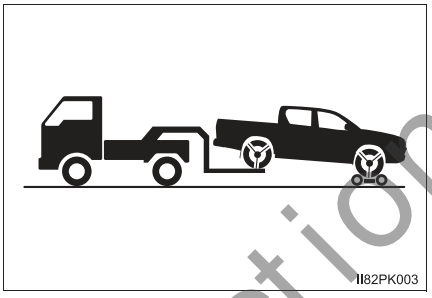

Use a towing dolly under the front wheels.

Not for Reproduction

Using a flatbed truck

If your vehicle is transported by a flatbed truck, it should be tied down at the locations shown in the illustrations.

▶ 2WD models

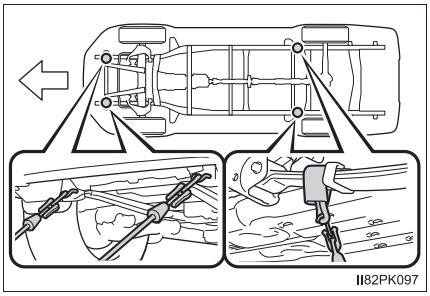

▶ 4WD models and Pre Runner

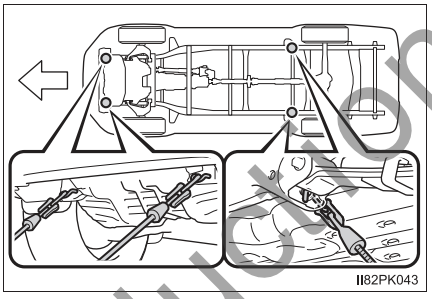

When attaching the hooks to the rear of the vehicle, make sure to attach them to the inside of the vehicle.

If you use chains or cables to tie down your vehicle, the angles shaded in black must be 45°.

Do not overly tighten the tie downs or the vehicle may be damaged.

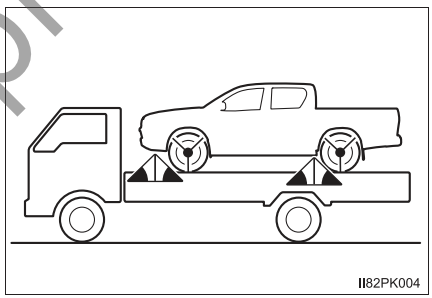

Not for Reproduction

Emergency towing

If a tow truck is not available in an emergency, your vehicle may be temporarily towed using cables or chains secured to the emergency towing hooks. This should only be attempted on hard surfaced roads for at most 80 km (50 miles) at under 30 km/h (18 mph).

A driver must be in the vehicle to steer and operate the brakes. The vehicle's wheels, drive train, axles, steering and brakes must be in good condition.

Emergency towing procedure

1 Securely attach cables or chains to the towing hooks.

Take care not to damage the vehicle body.

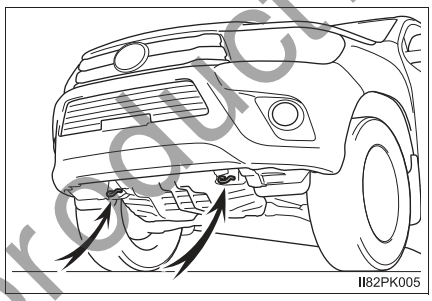

2 Enter the vehicle being towed and start the engine.

If the engine does not start, turn the engine switch to the "ON" position (vehicles without smart entry & start system) or IGNITION ON mode (vehicles with smart entry & start system).

3 4WD models: Turn the front-wheel drive control switch to H2. (→P. 220)

4 Shift the shift lever to N and release the parking brake.

When the shift lever cannot be shifted (automatic transmission): →P. 183

Not for Reproduction

While towing

If the engine is not running, the power assist for the brakes and steering will not function, making steering and braking more difficult.

WARNING

Observe the following precautions.
Failure to do so may result in death or serious injury.

When towing the vehicle

2WD models and Pre Runner: Be sure to transport the vehicle with all four wheels raised off the ground. If the vehicle is towed with the tires contacting the ground, the drivetrain and related parts may be damaged or an accident may occur due to a change in direction of the vehicle.

4WD models: Be sure to transport the vehicle with all four wheels raised off the ground. If the vehicle is towed with the tires contacting the ground, the drivetrain and related parts may be damaged, and the vehicle may fly off the truck.

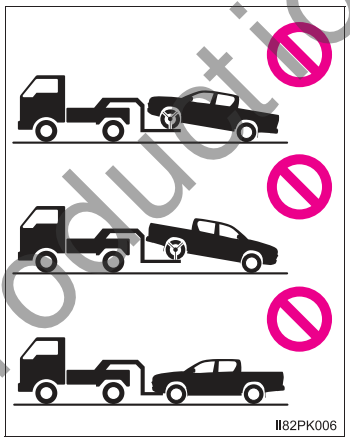

While towing

- When towing using cables or chains, avoid sudden starts, etc. which place excessive stress on the towing hooks, cables or chains. The towing hooks, cables or chains may become damaged, broken debris may hit people, and cause serious damage.
- Do not turn the engine switch to the “LOCK” position (vehicles without smart entry & start system) or off (vehicles with smart entry & start system).
  There is a possibility that the steering wheel is locked and cannot be operated.

Not for Reproduction

NOTICE

■ **To prevent damage to the vehicle when towing using a wheel-lift type truck**

- Do not tow the vehicle from the rear when the engine switch is in the “LOCK” position or the key is removed (vehicles without smart entry & start system) or the engine switch is turned to off (vehicles with smart entry & start system). The steering lock mechanism is not strong enough to hold the front wheels straight.
- When raising the vehicle, ensure adequate ground clearance for towing at the opposite end of the raised vehicle. Without adequate clearance, the vehicle could be damaged while being towed.

■ **To prevent damage to the vehicle when towing with a sling-type truck**

Do not tow with a sling-type truck, either from the front or rear.

■ **To prevent damage to the vehicle during emergency towing**

Do not secure cables or chains to the suspension components.

Not for Reproduction

If you think something is wrong

If you notice any of the following symptoms, your vehicle probably needs adjustment or repair. Contact your Toyota dealer as soon as possible.

Visible symptoms

- Fluid leaks under the vehicle.
  (Water dripping from the air conditioning after use is normal.)
- Flat-looking tires or uneven tire wear
- Engine coolant temperature gauge needle continually points higher than normal.

Audible symptoms

- Changes in exhaust sound
- Excessive tire squeal when cornering
- Strange noises related to the suspension system
- Pinging or other noises related to the engine

Operational symptoms

- Engine missing, stumbling or running roughly
- Appreciable loss of power
- Vehicle pulls heavily to one side when braking
- Vehicle pulls heavily to one side when driving on a level road
- Loss of brake effectiveness, spongy feeling, pedal almost touches the floor

Not for Reproduction

Fuel pump shut off system (gasoline engine only)

To minimize the risk of fuel leakage when the engine stalls or when an airbag inflates upon collision, the fuel pump shut off system stops the supply of fuel to the engine.

Follow the procedure below to restart the engine after the system is activated.

1. Turn the engine switch to the “ACC” or “LOCK” position (vehicles without smart entry & start system) or ACCESSORY mode or off (vehicles with smart entry & start system).
2. Restart the engine.

NOTICE

Before starting the engine

Inspect the ground under the vehicle.
If you find that fuel has leaked onto the ground, the fuel system has been damaged and is in need of repair. Do not restart the engine.

Not for Reproduction

If a warning light turns on or a warning buzzer sounds

Calmly perform the following actions if any of the warning lights comes on or flashes. If a light comes on or flashes, but then goes off, this does not necessarily indicate a malfunction in the system. However, if this continues to occur, have the vehicle inspected by your Toyota dealer.

Warning light and warning buzzer list

Warning light	Warning light/Details/Actions
	Brake system warning light (warning buzzer) Indicates: • Low brake fluid • Malfunction in the brake system • Low negative pressure in the vacuum tank (diesel engine) → **Immediately stop the vehicle in a safe place and contact your Toyota dealer. Continuing to drive the vehicle may be dangerous.**
	Charging system warning light (if equipped) Indicates a malfunction in the vehicle's charging system → **Immediately stop the vehicle in a safe place and contact your Toyota dealer.**
	Low engine oil pressure warning light (warning buzzer) (if equipped)*1 Indicates that the engine oil pressure is too low (This warning light may come on if the vehicle is stopped on a slope. Move to a level surface and check to see if the light goes off.) → **Immediately stop the vehicle in a safe place and contact your Toyota dealer.**

Not for Reproduction

Warning light	Warning light/Details/Actions
	Malfunction indicator lamp (warning buzzer) Indicates the followings if the warning light comes on or flashes: • Malfunction in the electronic engine control system. • Malfunction in the electronic throttle control system. • Malfunction in the electronic automatic transmission control system. (if equipped) • The boost pressure in the turbocharger is abnormally high.*2 (diesel engine) • Malfunction in the DPF system (if equipped) → **Have the vehicle inspected by your Toyota dealer immediately.**
	SRS warning light Indicates a malfunction in: • The SRS airbag system; or • The seat belt pretensioner system → **Have the vehicle inspected by your Toyota dealer immediately.**
	ABS warning light Indicates a malfunction in: • The ABS; or • The brake assist system → **Have the vehicle inspected by your Toyota dealer immediately.**
	Slip indicator Indicates a malfunction in: • The VSC system; • Trailer sway control system; • The TRC/A-TRC system; • The hill-start assist control system; or • The downhill assist control system (if equipped) → **Have the vehicle inspected by your Toyota dealer immediately.** The light will flash when any of the above systems other than the hill-start assist control system are operating.

Not for Reproduction

Warning light	Warning light/Details/Actions
	Four-wheel drive indicator light (warning buzzer)*3 (if equipped) Indicates that the differential oil temperature is too high when the light flashes rapidly and a buzzer sounds. → **Turn the front-wheel drive control switch to H2, and wait until the warning light goes off.** Indicates a malfunction in the four-wheel drive system when the light flashes rapidly and a buzzer does not sound. → **Have the vehicle inspected by your Toyota dealer immediately.**
4LO	**Low speed four-wheel drive indicator light (if equipped)** Indicates a malfunction in the four-wheel drive system when the light flashes rapidly. → **Have the vehicle inspected by your Toyota dealer immediately.**
	Rear differential lock indicator light (if equipped) Indicates a malfunction in the rear differential lock system when the light flashes rapidly. → **Have the vehicle inspected by your Toyota dealer immediately.**
A/T OIL TEMP	**Automatic transmission fluid temperature warning light (if equipped)** Indicates that the automatic transmission fluid temperature is too high when the light comes on. → **Immediately stop the vehicle in a safe place, shift the shift lever to P and wait until the light goes off. If the light goes off, you may start the vehicle again. If the light does not go off, contact your Toyota dealer.** Indicates a malfunction in the automatic transmission system when the light flashes. → **Immediately stop the vehicle in a safe place, shift the shift lever to P and contact your Toyota dealer.**
	Fuel system warning light (warning buzzer)*4 (if equipped) The amount of accumulated water in the fuel filter has reached the specified level if the light flashes. → **P. 415** The fuel filter need to be replaced if the light comes on. → **Have the vehicle inspected by your Toyota dealer immediately.**

Not for Reproduction

Warning light	Warning light/Details/Actions
	DPF system warning light (warning buzzer) (if equipped) Indicates that the amount of accumulated deposit in the DPF catalytic converter has reached the specified level if the light comes on. Regenerating the filter is required. → **Vehicles without DPF system switch: Refer to P. 467.** **Vehicles with DPF system switch: Refer to P. 245.** Indicates a malfunction in the DPF system if the light flashes rapidly. → **Have the vehicle inspected by your Toyota dealer immediately.**
	Brake Override System warning light (if equipped) Indicates that the accelerator and brake pedal are being depressed simultaneously if the warning light comes on (→P. 146) → **Release the accelerator pedal and depress the brake pedal.** Indicates a malfunction in the Brake Override System if the warning light flashes → **Have the vehicle inspected by your Toyota dealer immediately.**
	Cruise control indicator light (if equipped)*5 Indicates a malfunction in the cruise control system → **P. 206**
	Open door warning light (warning buzzer)*6 (if equipped) Indicates that a door is not fully closed → **Check that all the doors are closed.**
	Driver's and front passenger's seat belt reminder light (warning buzzer)*7 Warns the driver and front passenger to fasten his/her seat belt → **Fasten the seat belt.**
(On the center panel)	**Rear passengers' seat belt reminder lights (warning buzzer)*8 (if equipped)** Warn the rear passengers to fasten their seat belts → **Fasten the seat belt.**
	Low fuel level warning light Indicates remaining fuel is approximately 12.0 L (3.2 gal., 2.6 Imp.gal.) or less → **Refuel the vehicle.**

Not for Reproduction

Warning light	Warning light/Details/Actions
	Low engine oil level warning light (if equipped) Indicates that engine oil level is low (This warning light may come on if the vehicle is stopped on a slope. Move the vehicle to a level surface and check to see if the light goes off.) → **Check the level of engine oil and add more oil if necessary.**
	Master warning light (warning buzzer) (if equipped) A buzzer sounds and the warning light comes on and flashes to indicate that the master warning system has detected a malfunction. → **P. 469**
	Parking brake indicator light (warning buzzer)*9 Warns the driver to release parking brake. → **Release the parking brake.**

*1: The buzzer sounds if the vehicle reaches a speed of 5 km/h (3 mph).

*2: Slow down until the lamp goes off.

*3: The buzzer sounds when the differential oil temperature is too high and turning the front-wheel drive control switch to H2 is required.

*4: The buzzer will sound at the same time the warning light flashes.

*5: The light turns to yellow.

*6: The open door warning buzzer sounds if the vehicle reaches or exceeds a speed of 5 km/h (3 mph).

*7: The driver's and front passenger's seat belt buzzer sounds to alert the driver and front passenger that his or her seat belt is not fastened. The buzzer sounds intermittently for 30 seconds after the vehicle reaches a speed of 20 km/h (12 mph). Then, if the seat belt is still unfastened, the buzzer will sound in a different tone for 90 more seconds.

*8: The rear passengers' seat belt buzzer sounds to alert the rear passenger that his or her seat belt is not fastened. The buzzer sounds intermittently for 30 seconds after the vehicle reaches a speed of 20 km/h (12 mph). Then, if the seat belt is still unfastened, the buzzer will sound in a different tone for 90 more seconds.

*9: The parking brake engaged warning buzzer sounds if the vehicle reaches a speed of approximately 5 km/h (3 mph) or more.

Not for Reproduction

Other warning light

Carrying out the corresponding action turns the warning light off.

Warning light	Warning light/Details/Actions
	Go to service warning light (warning buzzer) (if equipped) Indicates a malfunction in the electronic engine control system or electronic throttle control system, or the Brake Override System. → **Have the vehicle inspected by your Toyota dealer**

■ Front passenger detection sensor, seat belt reminder and warning buzzer

- If luggage is placed on a front passenger seat, the front passenger detection sensor may cause the warning light to flash and the warning buzzer to sound even if a passenger is not sitting in the seat.
- If a cushion is placed on the seat, the sensor may not detect a passenger, and the warning light may not operate properly.

■ If the malfunction indicator lamp comes on while driving

The malfunction indicator lamp will come on if the fuel tank becomes completely empty. If the fuel tank is empty, refuel the vehicle immediately. The malfunction indicator lamp will go off after several trips.

If the malfunction indicator lamp does not go off, contact your Toyota dealer as soon as possible.

Not for Reproduction

■ If the DPF system warning light comes on (if equipped)

The deposit collected in the filter needs to be regenerated.

Vehicles without DPF system switch:
To regenerate the filter, the following driving methods are recommended*.

- By driving continuously (for example, at around 65 km/h [40 mph] for 20 to 30 minutes).
- By avoiding short trips, or by driving continuously (leaving the engine running for long periods of time).

When the outside temperature is approximately -15°C (5°F) or lower, check the engine is warmed up before driving the vehicle to regenerate the filter. If the engine is cold, warm up the engine by driving the vehicle downshifting to increase the engine speed. Depending on the situation, it may be necessary to depress the accelerator pedal until the engine speed is increased to 3000 rpm.

The DPF system warning light will extinguish when regeneration is completed. However, if this driving cannot be carried out, or if the light does not extinguish even after driving, have the vehicle inspected by your Toyota dealer immediately.

For details of the DPF system, refer to P. 244.

*: When driving, pay sufficient attention to weather, road conditions, terrain and traffic conditions, and drive according to traffic laws.

Vehicles with DPF system switch:

→P. 245

Not for Reproduction

WARNING

■ **If a warning light comes on or a warning buzzer sounds when a warning message is shown on the multi-information display (vehicles with multi-information display)**

Check and follow the message shown on the multi-information display. Failure to do so may result in death or serious injury.

■ **If both the ABS and the brake system warning lights remain on**

Stop your vehicle in a safe place immediately and contact your Toyota dealer. The vehicle will become extremely unstable during braking, and the ABS system may fail, which could cause an accident resulting in death or serious injury.

NOTICE

■ **If the malfunction indicator lamp comes on when the boost pressure in the turbocharger is abnormally high (diesel engine)**

Never drive at high speed or race the engine even after the lamp goes off.

■ **If the fuel system warning light flashes (diesel engine)**

Never drive the vehicle with the warning light flashing. Continued driving with water accumulated in the fuel filter will damage the fuel injection pump.

Not for Reproduction

If a warning message is displayed*

The multi-information display shows warnings of system malfunctions, incorrectly performed operations, and messages that indicate a need for maintenance. When a message is shown, perform the correction procedure appropriate to the message.

▶ Vehicles with multi-information display type A

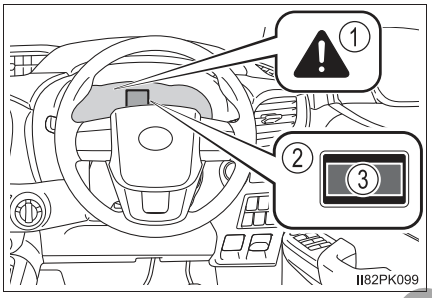

▶ Vehicles with multi-information display type B

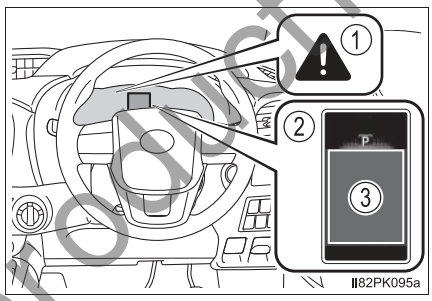

① Master warning light

The master warning light also comes on or flashes in order to indicate that a message is currently being displayed on the multi-information display.

② Multi-information display

③ Handling method

Follow the instructions of the message on the multi-information display.

If any of the warning messages comes on again after the following actions have been performed, contact your Toyota dealer.

*: If equipped

Not for Reproduction

Messages and warnings

The warning lights and warning buzzers operate as follows depending on the content of the message. If a message indicates the need for inspection by a dealer, have the vehicle inspected by your Toyota dealer immediately.

	System warning light	Warning buzzer*	Warning
Comes on	Comes on	Sounds	Indicates an important situation, such as when a system related to driving is malfunctioning or that danger may result if the correction procedure is not performed
Comes on	—	Sounds	
—	Comes on or flashes	Sounds	Indicates an important situation, such as when the systems shown on the multi-information display may be malfunctioning
Flashes	—	Sounds	Indicates a situation, such as when damage to the vehicle or danger may result
Comes on	—	Does not sound	Indicates a condition, such as malfunction of electrical components, their condition, or indicates the need for maintenance
Flashes	—	Does not sound	Indicates a situation, such as when an operation has been performed incorrectly, or indicates how to perform an operation correctly

*: A buzzer sounds the first time a message is shown on the multi-information display.

Not for Reproduction

■ **Warning messages**

The warning messages explained below may differ from the actual messages according to operation conditions and vehicle specifications.

■ **If ⚠ is shown on the multi-information display**

The engine oil pressure is too low. (This warning message may be displayed if the vehicle is stopped on a slope. Move to a level surface and check to see if the message goes off.)
Immediately stop the vehicle in a safe place and contact your Toyota dealer. Continuing to drive the vehicle may be dangerous.

■ **If "ACCELERATOR AND BRAKE PEDALS DEPRESSED SIMULTANEOUSLY"/"Accelerator and brake pedals depressed simultaneously" is shown on the multi-information display**

The accelerator and brake pedal are being depressed simultaneously. (→P. 146)

Release the accelerator pedal and depress the brake pedal.

■ **If "DIFFERENTIAL OIL TEMP HIGH COOLING TIME REQUIRED"/"Differential oil temp high Cooling time required" is shown on the multi-information display**

The differential oil temperature is too high.
Wait until the warning message goes off.

■ **If "ENGINE OIL LEVEL LOW ADD OR REPLACE"/"Engine oil level low Add or replace" is shown on the multi-information display**

The engine oil level is low. (This warning message may be displayed if the vehicle is stopped on a slope. Move to a level surface and check to see if the message goes off.)
Check the level of the engine oil and add or replace oil if necessary. (→P. 396).

■ **If "POWER TURNED OFF TO SAVE BATTERY"/"Power turned off to save battery" is shown on the multi-information display**

Power was turned off due to the automatic power off function.
Next time when starting the engine, increase the engine speed slightly and maintain that level for approximately 5 minutes to recharge the battery.

Not for Reproduction

■**If “DPF FULL SEE OWNER’S MANUAL”/“DPF full See owner’s manual” or “DPF FULL MANUAL REGENERATION REQUIRED SEE OWNER’S MANUAL”/“DPF full Manual regeneration required See owner’s manual” is shown on the multi-information display**

The deposit collected in the filter needs to be regenerated.
Vehicles without DPF system switch:
To regenerate the filter, the following driving methods are recommended*.

- By driving continuously (for example, at around 65 km/h [40 mph] for 20 to 30 minutes).
- By avoiding short trips, or by driving continuously (leaving the engine running for long periods of time).

When the outside temperature is approximately -15°C (5°F) or lower, check the engine is warmed up before driving the vehicle to regenerate the filter. If the engine is cold, warm up the engine by driving the vehicle downshifting to increase the engine speed. Depending on the situation, it may be necessary to depress the accelerator pedal until the engine speed is increased to 3000 rpm.

The warning message will disappear when regeneration is completed. However, if this driving cannot be carried out, or if the message does not disappear even after driving, have the vehicle inspected by your Toyota dealer immediately.
For details of the DPF system, refer to P. 244.

*: When driving, pay sufficient attention to weather, road conditions, terrain and traffic conditions, and drive according to traffic laws.

Vehicles with DPF system switch:
→P. 245

■**If a message that indicates the need for the shift lever operation is shown**

To prevent the shift lever from being operated incorrectly or the vehicle from moving unexpectedly, a message that requires shifting the shift lever may be shown on the multi-information display. In that case, follow the instruction of the message and shift the shift lever.

Not for Reproduction

■ **If "SEE OWNER'S MANUAL"/"See owner's manual" is shown on the multi-information display**

● If the following messages are shown, follow the instructions accordingly.

- "TRANSMISSION FLUID TEMP HIGH"/"Transmission fluid temp high Stop in a safe place" (→P. 184)
- "WATER ACCUMULATION IN FUEL FILTER"/"Water accumulation in fuel filter" (→P. 415)

● If "SMART ENTRY & START SYSTEM MALFUNCTION"/"Smart entry & start system malfunction" is shown, this may be a malfunction.
Immediately have the vehicle inspected by your Toyota dealer.

● If "Low oil pressure Stop in a safe place" is shown, there may be a malfunction. Immediately stop the vehicle in a safe place and contact your Toyota dealer. Continuing to drive the vehicle may be dangerous.

■ **If "VISIT YOUR DEALER"/"Visit your dealer" is shown on the multi-information display**

The system or part shown on the multi-information display is malfunctioning.

Have the vehicle inspected by your Toyota dealer immediately.

■ **Warning buzzer**

In some cases, the buzzer may not be heard due to being in a noisy location or audio sound.

WARNING

■ **If a warning light comes on or a warning buzzer sounds when a warning message is shown on the multi-information display**

Check and follow the message shown on the multi-information display.
Failure to do so may result in death or serious injury.

NOTICE

■ **While the engine oil level warning is displayed**

Continued engine operation with low engine oil will damage the engine.

■ **If "WATER ACCUMULATION IN FUEL FILTER SEE OWNER'S MANUAL"/"Water accumulation in fuel filter See owner's manual" is shown on the multi-information display**

Never drive the vehicle if the warning message is displayed. Continued driving with water accumulated in the fuel filter will damage the fuel injection pump.

Not for Reproduction

If you have a flat tire

Your vehicle is equipped with a spare tire. The flat tire can be replaced with the spare tire.

For details about tires: →P. 416

WARNING

■ If you have a flat tire

Do not continue driving with a flat tire.
Driving even a short distance with a flat tire can damage the tire and the wheel beyond repair, which could result in an accident.

Before jacking up the vehicle

- Stop the vehicle in a safe place on a hard, flat surface.
- Set the parking brake.
- Shift the shift lever to P (automatic transmission) or R (manual transmission).
- Stop the engine.
- Turn on the emergency flashers. (→P. 450)

Location of the spare tire

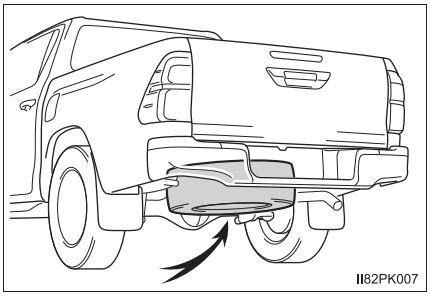

Not for Reproduction

Location of the jack and tools

▶ Single-cab models

The jack and tools are stored behind the seat.

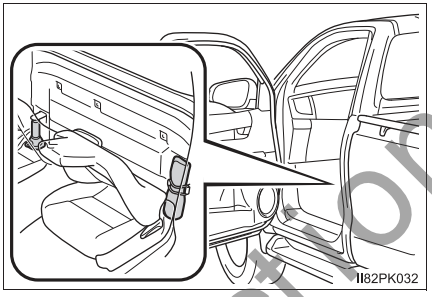

▶ Smart-cab models

The jack and tools are stored under the lid.

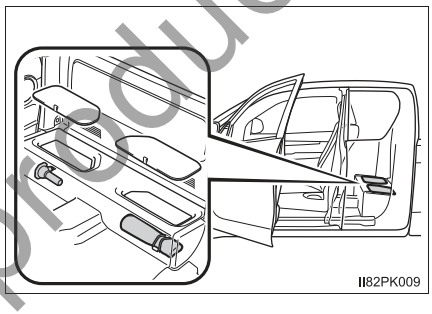

▶ Double-cab models

The jack and tools are stored under the bottom cushion.

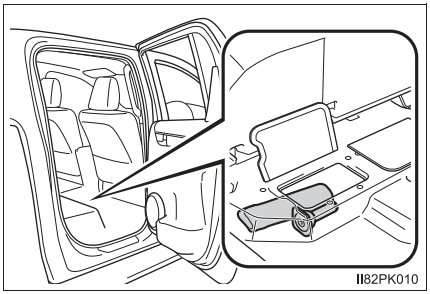

Not for Reproduction

WARNING

■ **Using the tire jack**

Improper use of the tire jack may cause the vehicle to suddenly fall off the jack, leading to death or serious injury.

- Do not use the tire jack for any purpose other than replacing tires or installing and removing tire chains.
- Only use the tire jack that comes with this vehicle for replacing a flat tire. Do not use it on other vehicles, and do not use other tire jacks for replacing tires on this vehicle.
- Make sure the tire jack can be moved properly.
- Always check that the tire jack is securely set to the correct jack up point.
- Do not put any part of your body under the vehicle while it is supported by the jack.
- Do not start or run the engine while your vehicle is supported by the jack.
- Do not raise the vehicle while someone is inside.
- When raising the vehicle, do not put an object on or under the jack.
- Do not raise the vehicle to a height greater than that required to replace the tire.
- Do not continue jacking up once the yellow caution line has appeared.

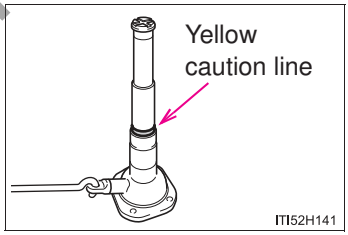

- Use a jack stand if it is necessary to get under the vehicle.

Take particular care when lowering the vehicle to ensure that no one working on or near the vehicle may be injured.

■ **Using the jack handle**

Insert the square head securely until you hear a click to prevent the extension parts from coming apart unexpectedly.

Not for Reproduction

Taking out the jack and tool bag

▶ Single-cab models

1 Unhook the strap and take out the tool bag.

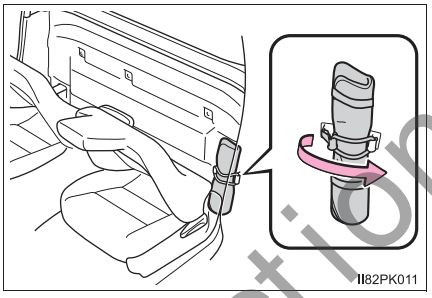

2 Take out the jack.

① For loosening

② For tightening

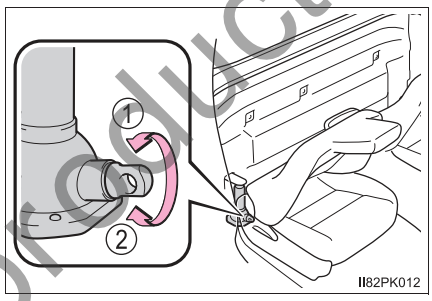

▶ Smart-cab models

1 Remove the rear seat cushions. (→P. 125)

2 Pull the tag and open the lid.

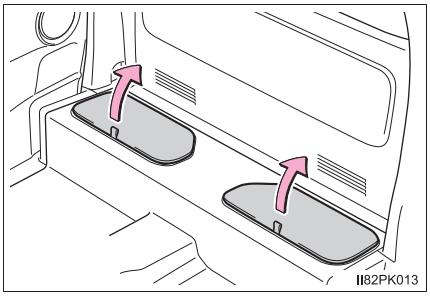

3 Unhook the strap and take out the tool bag.

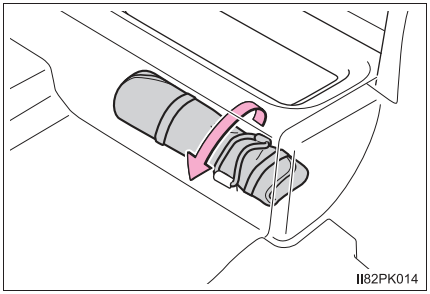

Not for Reproduction

4 Take out the jack.

① For loosening

② For tightening

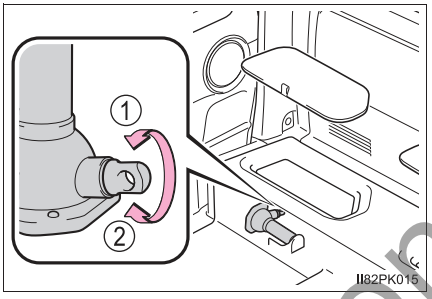

▶ Double-cab models

1 Tumbling the bottom cushion (→P. 125)

2 Open the lid.

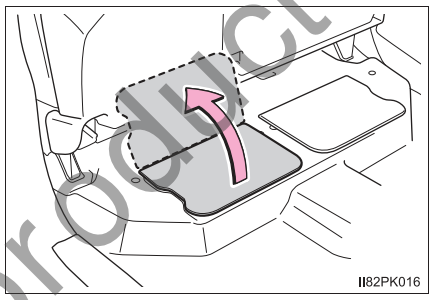

3 Take out the tool bag.

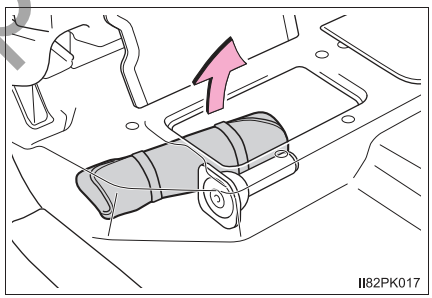

4 Take out the jack.

① For loosening

② For tightening

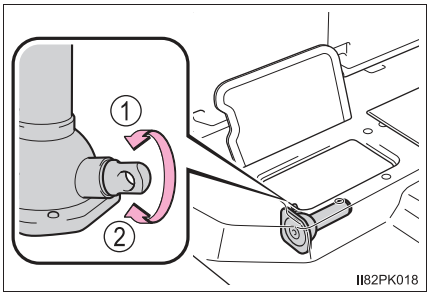

Not for Reproduction

Taking out the spare tire

1 Assemble the jack handle end, jack handle extensions and wheel nut wrench.

To assemble the jack handle extension and wheel nut wrench, push in the projection on the jack handle extension.

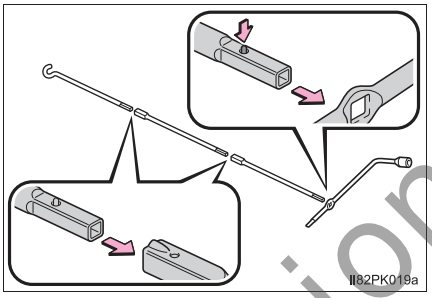

2 Insert the jack handle end into the lowering screw.

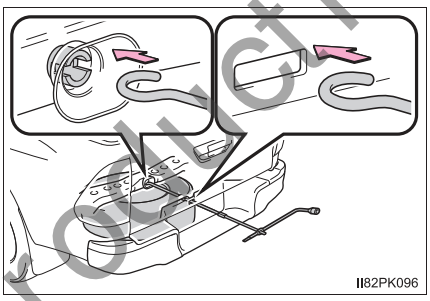

3 Lower the spare tire completely to the ground.

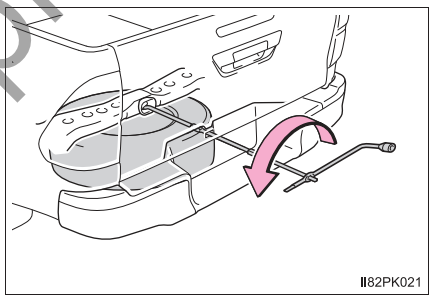

4 Remove the holding bracket and pull out the spare tire.

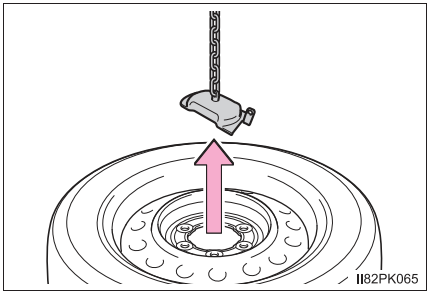

Not for Reproduction

Replacing a flat tire

1 Chock the tires.

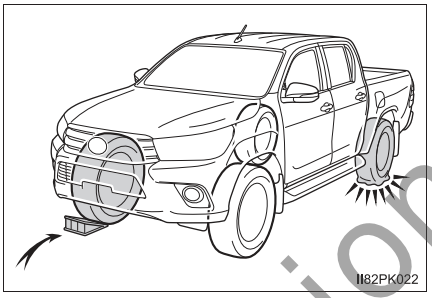

Flat tire		Wheel chock positions
Front	Left-hand side	Behind the rear right-hand side tire
	Right-hand side	Behind the rear left-hand side tire
Rear	Left-hand side	In front of the front right-hand side tire
	Right-hand side	In front of the front left-hand side tire

2 Remove the wheel ornament, using the beveled end of the wheel nut wrench as shown.

To protect the wheel ornament, place a rag between the wheel nut wrench and the wheel ornament.

▶ Type A

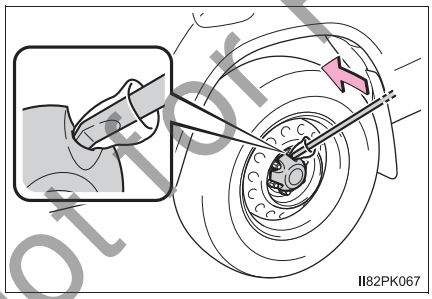

▶ Type B

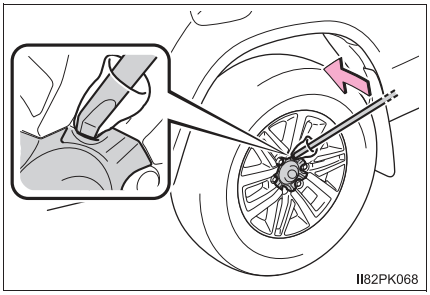

Not for Reproduction

3 Slightly loosen the wheel nuts (one turn).

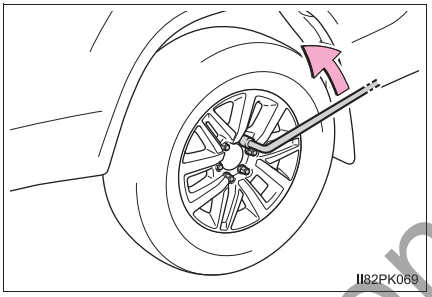

4 Assembling the jack handle. (→P. 479)

5 Position the jack at the jack points as shown.

▶ Front

① 2WD models:
Under the front side rail

② 4WD models and Pre Runner:
Under the cross member

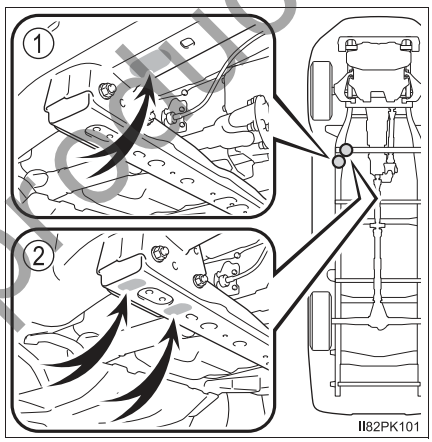

▶ Rear

Under the rear axle housing

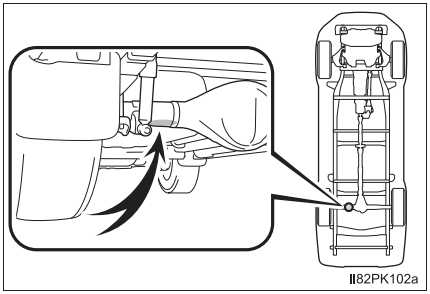

Not for Reproduction

6 Raise the vehicle until the tire is slightly raised off the ground.

When positioning the jack under the rear axle housing, make sure the groove on the top of the jack fits with the rear axle housing.

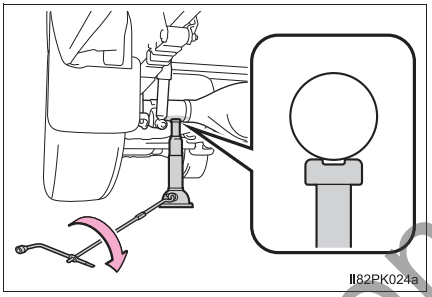

7 Remove all the wheel nuts and the tire.

When resting the tire on the ground, place the tire so that the wheel design faces up to avoid scratching the wheel surface.

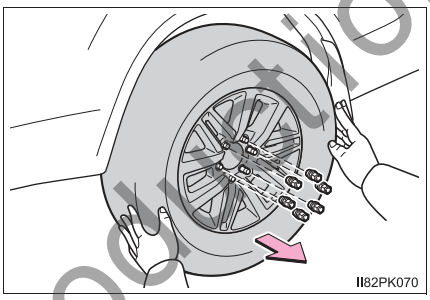

8 For some models, remove the wheel ornament by pushing from the reverse side.

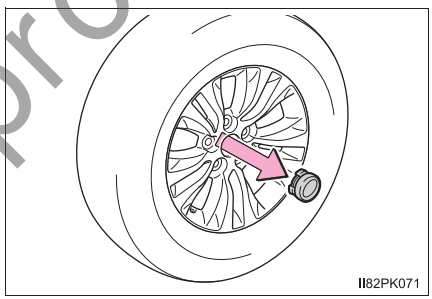

Not for Reproduction

WARNING

■ **Replacing a flat tire**

● Observe the following precautions.

Failure to do so may result in serious injury:

- Lower the spare tire completely to the ground before removing it from under the vehicle.
- Do not try to remove the wheel ornament by hand. Take due care in handling the ornament to avoid unexpected personal injury.
- Do not touch the disc wheels or the area around the brakes immediately after the vehicle has been driven.
  After the vehicle has been driven the disc wheels and the area around the brakes will be extremely hot. Touching these areas with hands, feet or other body parts while changing a tire, etc. may result in burns.

● Failure to follow these precautions could cause the wheel nuts to loosen and the tire to fall off, resulting in death or serious injury.

- 2WD models: Have the wheel nuts tightened with a torque wrench to 152 N•m (15.5 kgf•m, 112 ft•lbf) (steel wheels), or 121 N•m (12.3 kgf•m, 89 ft•lbf) (aluminum wheels) as soon as possible after changing wheels.
- 4WD models and Pre Runner: Have the wheel nuts tightened with a torque wrench to 105 N•m (10.7 kgf•m, 77 ft•lbf) as soon as possible after changing wheels.
- Do not attach a heavily damaged wheel ornament, as it may fly off the wheel while the vehicle is moving.
- When installing a tire, only use wheel nuts that have been specifically designed for that wheel.
- If there are any cracks or deformations in the bolt screws, nut threads or bolt holes of the wheel, have the vehicle inspected by your Toyota dealer.
- When installing the wheel nuts, be sure to install them with the tapered ends facing inward. (→P. 422)

Not for Reproduction

Installing the spare tire

1 Remove any dirt or foreign matter from the wheel contact surface.

If foreign matter is on the wheel contact surface, the wheel nuts may loosen while the vehicle is in motion, causing the tire to come off.

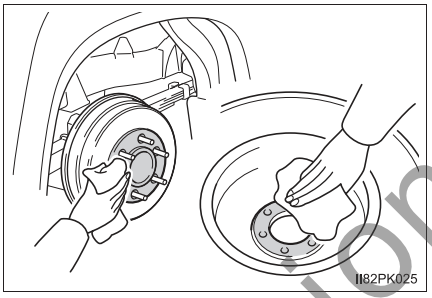

2 Install the tire and loosely tighten each wheel nut by hand by approximately the same amount.

When replacing a steel wheel with a steel wheel, tighten the wheel nuts until the tapered portion comes into loose contact with the disc wheel seat.

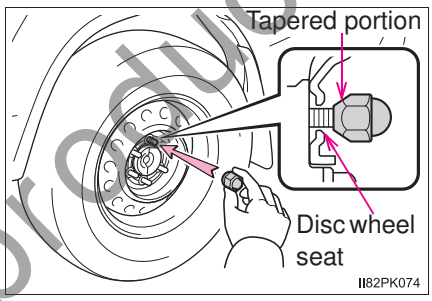

When replacing an aluminum wheel with a steel wheel, tighten the wheel nuts until the tapered portion comes into loose contact with the disc wheel seat.

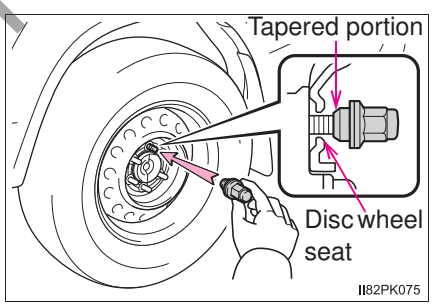

When replacing an aluminum wheel with an aluminum wheel, turn the wheel nuts until the washers come into contact with the disc wheel.

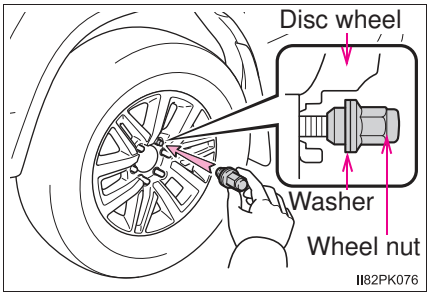

Not for Reproduction

3 Lower the vehicle.

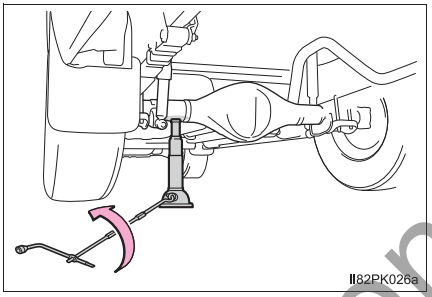

4 Firmly tighten each wheel nut two or three times in the order shown in the illustration.

▶ 2WD models

Tightening torque:

Steel wheels
152 N•m (15.5 kgf•m, 112 ft•lbf)

Aluminum wheels
121 N•m (12.3 kgf•m, 89 ft•lbf)

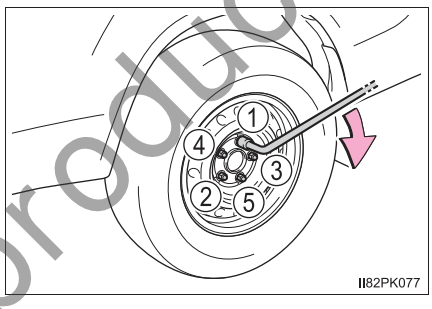

▶ 4WD models and Pre Runner

Tightening torque:

105 N•m (10.7 kgf•m, 77 ft•lbf)

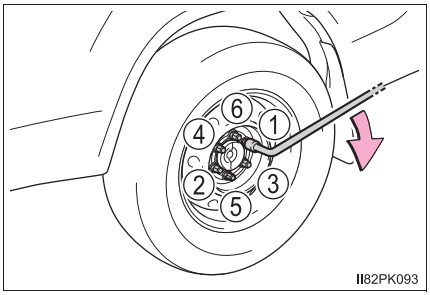

Not for Reproduction

5 Vehicles with spare tire of the same wheel type as the installed tires: Reinstall the wheel ornament.

▶ Type A

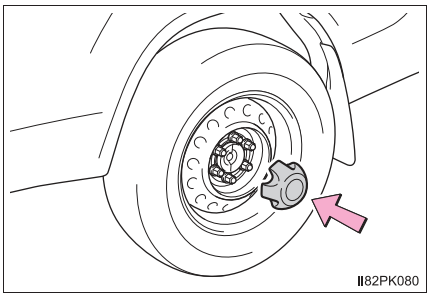

▶ Type B

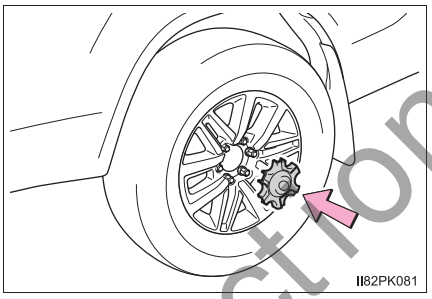

▶ Type C

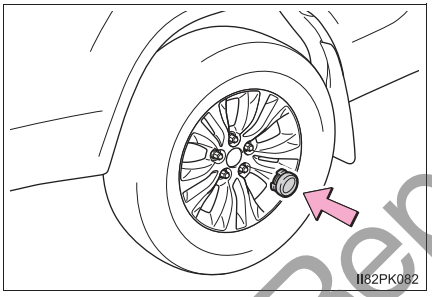

Stowing the flat tire, jack and all tools

1 Lay down the tire with the outer side facing up, and hook the holding bracket as shown in the illustration.

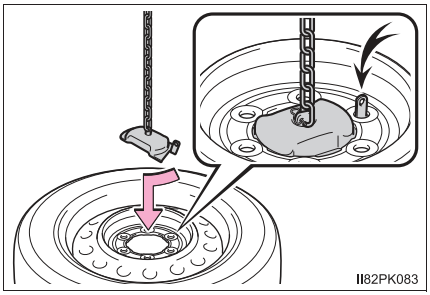

Not for Reproduction

2 Raise the tire.

After the tire goes half way up, check that the suspended chain is able to enter the tire hole, for proper storage.

Check the tire from the side to see that the tire is stored horizontally.

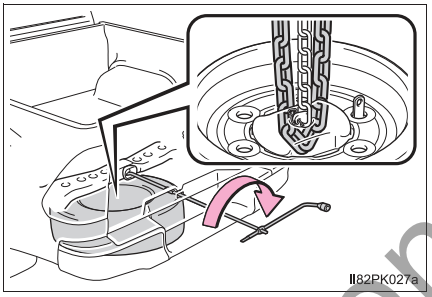

3 Push in the projection on the jack handle and disassemble the jack handle end, jack handle extensions and wheel nut wrench.

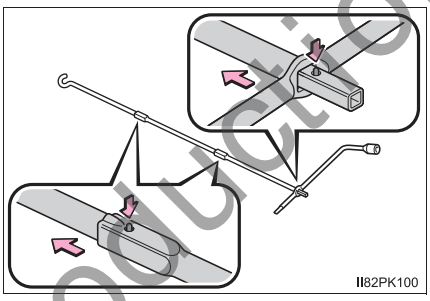

4 Stow the tools and jack securely.

WARNING

After using the tools and jack

Before driving, make sure all the tools and jack are securely in place in their storage location to reduce the possibility of personal injury during a collision or sudden braking.

NOTICE

When stowing the flat tire

Ensure that there is no object caught between the tire and the vehicle underbody.

When assembling the jack handle extension

Insert the square head securely until you hear a click. Otherwise the extension may come off and it may damage the paint or vehicle body.

Not for Reproduction

If the engine will not start

If the engine will not start even though correct starting procedures are being followed (→P. 167, 170), consider each of the following points:

The engine will not start even though the starter motor operates normally.

One of the following may be the cause of the problem:

- There may not be sufficient fuel in the vehicle's tank.
  Gasoline engine: Refuel the vehicle.
  Diesel engine: →P. 503
- The engine may be flooded. (gasoline engine)
  Try to restart the engine again following correct starting procedures. (→P. 167, 170)
- There may be a malfunction in the engine immobilizer system. (→P. 71)

The starter motor turns over slowly, the interior lights and headlights are dim, or the horn does not sound or sounds at a low volume.

One of the following may be the cause of the problem:

- The battery may be discharged. (→P. 494)
- The battery terminal connections may be loose or corroded.

The starter motor does not turn over (vehicles with smart entry & start system).

The engine starting system may be malfunctioning due to an electrical problem such as an open circuit or a blown fuse. However, an interim measure is available to start the engine. (→P. 489)

Not for Reproduction

The starter motor does not turn over, the interior lights and headlights do not turn on, or the horn does not sound.

One of the following may be the cause of the problem:

- One or both of the battery terminals may be disconnected.
- The battery may be discharged. (→P. 494)
- There may be a malfunction in the steering lock system. (vehicles with smart entry & start system)

  Contact your Toyota dealer if the problem cannot be repaired, or if repair procedures are unknown.

Emergency start function (vehicles with smart entry & start system)

When the engine does not start, the following steps can be used as an interim measure to start the engine if the engine switch is functioning normally.

1. Set the parking brake.
2. Shift the shift lever to P (automatic transmission) or N (manual transmission).
3. Turn the engine switch to ACCESSORY mode.
4. Press and hold the engine switch for about 15 seconds while depressing the brake pedal and clutch pedal (manual transmission) firmly.

Even if the engine can be started using the above steps, the system may be malfunctioning. Have the vehicle inspected by your Toyota dealer.

Not for Reproduction

If the electronic key does not operate properly (vehicles with smart entry & start system)

If communication between the electronic key and vehicle is interrupted (→P. 119) or the electronic key cannot be used because the battery is depleted, the smart entry & start system and wireless remote control cannot be used. In such cases, the doors can be opened and the engine can be started by following the procedure below.

Locking and unlocking the doors

Use the mechanical key (→P. 104) in order to perform the following operations:

① Locks all doors

② Unlocks all doors

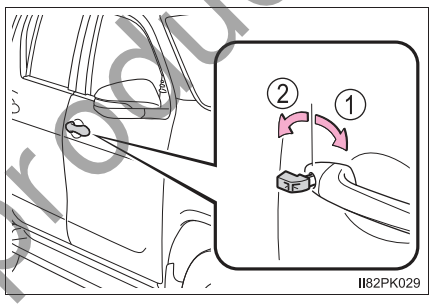

Not for Reproduction

Starting the engine

▶ Automatic transmission

1 Ensure that the shift lever is in P and depress the brake pedal.

2 Touch the area behind the lock button and unlock button on the electronic key to the engine switch.

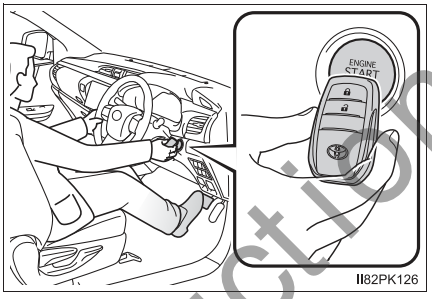

When the electronic key is detected, a buzzer sounds and the engine switch will turn to IGNITION ON mode.

When the smart entry & start system is deactivated in customization setting, the engine switch will turn to ACCESSORY mode.

3 Firmly depress the brake pedal.

A message indicating how to start the engine will be displayed on the multi-information display.

4 Press the engine switch.

In the event that the engine still cannot be started, contact your Toyota dealer.

Not for Reproduction

▶ Manual transmission

1 Ensure that the shift lever is in N and depress the clutch pedal.

2 Touch the area behind the lock button and unlock button on the electronic key to the engine switch.

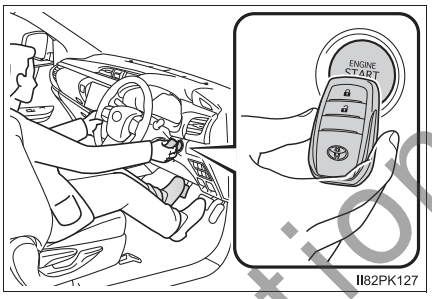

When the electronic key is detected, a buzzer sounds and the engine switch will turn to IGNITION ON mode.

When the smart entry & start system is deactivated in customization setting, the engine switch will turn to ACCESSORY mode.

3 Firmly depress the clutch pedal.

A message indicating how to start the engine will be displayed on the multi-information display.

4 Press the engine switch.

In the event that the engine still cannot be started, contact your Toyota dealer.

Not for Reproduction

■ **Stopping the engine**

Shift the shift lever to P (automatic transmission) or N (manual transmission) and press the engine switch as you normally do when stopping the engine.

■ **Replacing the key battery**

As the above procedure is a temporary measure, it is recommended that the electronic key battery be replaced immediately when the battery is depleted. (→P. 425)

■ **Changing engine switch modes**

Release the brake pedal (automatic transmission) or clutch pedal (manual transmission) and press the engine switch in step 3 above.

The engine does not start and modes will be changed each time the switch is pressed. (→P. 173)

■ **When the electronic key does not work properly**

- Make sure that the smart entry & start system has not been deactivated in the customization setting. If it is off, turn the function on.
  (Customizable features: →P. 529)
- Check if battery-saving mode is set. If it is set, cancel the function.
  (→P. 117)

Not for Reproduction

If the vehicle battery is discharged

The following procedures may be used to start the engine if the vehicle's battery is discharged.
You can also call your Toyota dealer or a qualified repair shop.

If you have a set of jumper (or booster) cables and a second vehicle with a 12-volt battery, you can jump start your vehicle by following the steps below.

1 Open the hood. (→P. 400)

2 Connect the jumper cables according to the following procedure:

① Connect a positive jumper cable clamp to the positive (+) battery terminal on your vehicle.

② Connect the clamp on the other end of the positive cable to the positive (+) battery terminal on the second vehicle.

③ Connect a negative cable clamp to the negative (-) battery terminal on the second vehicle.

④ Connect the clamp at the other end of the negative cable to a solid, stationary, unpainted metallic point away from the battery and any moving parts, as shown in the illustration.

▶ 1GR-FE engine

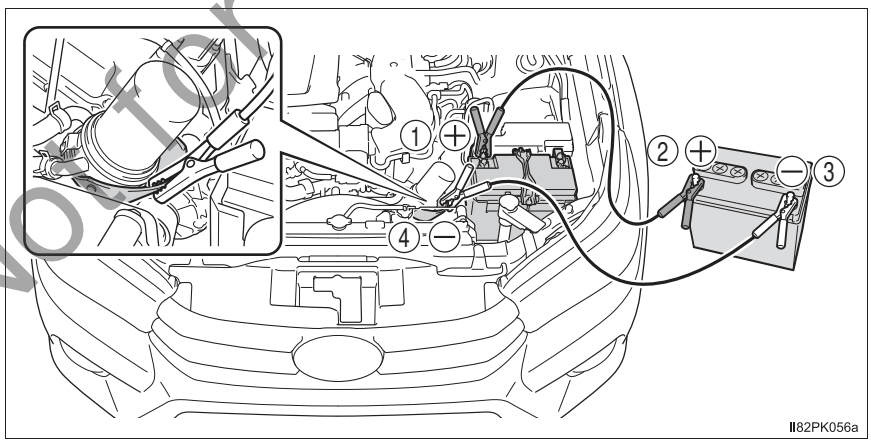

Not for Reproduction

▶ 2TR-FE engine

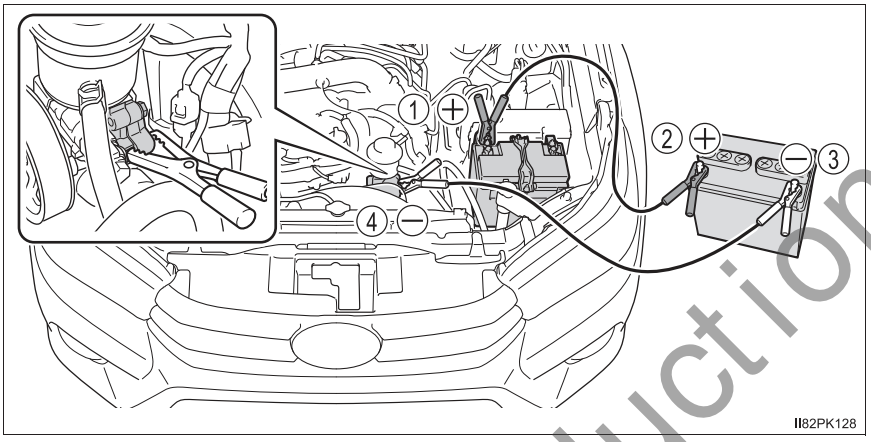

▶ 1GD-FTV and 2GD-FTV engines

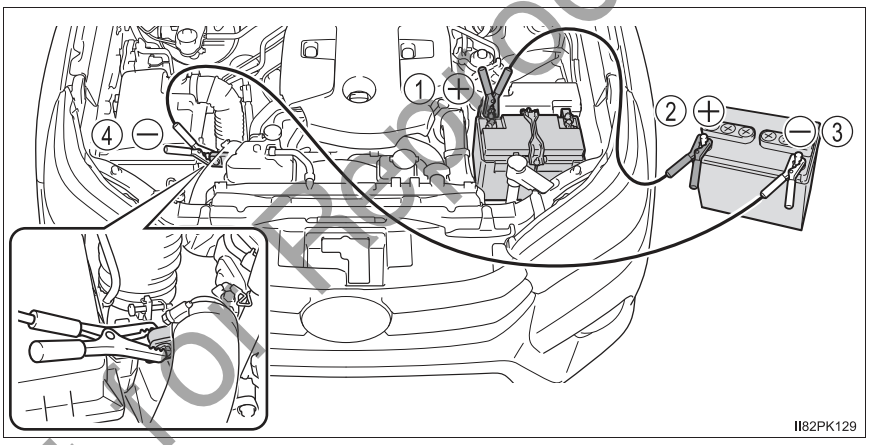

Not for Reproduction

3 Start the engine of the second vehicle. Increase the engine speed slightly and maintain at that level for approximately 5 minutes to recharge the battery of your vehicle.

4 Vehicles with smart entry & start system: Open and close any of the doors with the engine switch off.

5 Maintain the engine speed of the second vehicle and start the engine of your vehicle by turning the engine switch to the “ON” position (vehicles without smart entry & start system) or IGNITION ON mode (vehicles with smart entry & start system).

6 Once the vehicle’s engine has started, remove the jumper cables in the exact reverse order from which they were connected.

Once the engine starts, have the vehicle inspected at your Toyota dealer as soon as possible.

■ **Starting the engine when the battery is discharged (vehicles with automatic transmission)**

The engine cannot be started by push-starting.

■ **To prevent battery discharge**

- Turn off the headlights and the audio system while the engine is off.
- Turn off any unnecessary electrical components when the vehicle is running at a low speed for an extended period, such as in heavy traffic.

■ **When the battery is removed or discharged**

- Information stored in the ECU is cleared. When the battery is depleted, have the vehicle inspected at your Toyota dealer.
- The power windows may not close normally. In this case, initialize the power windows. (→P. 139)

■ **Charging the battery**

The electricity stored in the battery will discharge gradually even when the vehicle is not in use, due to natural discharge and the draining effects of certain electrical appliances. If the vehicle is left for a long time, the battery may discharge, and the engine may be unable to start. (The battery recharges automatically during driving.)

Not for Reproduction

■ **When recharging or replacing the battery (vehicles with smart entry & start system)**

- In some cases, it may not be possible to unlock the doors using the smart entry & start system when the battery is discharged. Use the wireless remote control or the mechanical key to lock or unlock the doors.
- The engine may not start on the first attempt after the battery has recharged but will start normally after the second attempt. This is not a malfunction.
- The engine switch mode is memorized by the vehicle. When the battery is reconnected, the system will return to the mode it was in before the battery was discharged. Before disconnecting the battery, turn the engine switch off. If you are unsure what mode the engine switch was in before the battery discharged, be especially careful when reconnecting the battery.

■ **When exchanging the battery**

- Use a battery that conforms to European regulations.
- Use a battery with the same case size as the previous battery and an equivalent 20 hour rate capacity (20HR) or greater.
  - If the sizes differ, the battery cannot be properly secured.
  - If the 20 hour rate capacity is low, even if the time period where the vehicle is not used is a short time, the battery may discharge and the engine may not be able to start.
- For details, consult your Toyota dealer.

⚠ WARNING

■ **When removing the battery terminals**

Always remove the negative (-) terminal first. If the positive (+) terminal contacts any metal in the surrounding area when the positive (+) terminal is removed, a spark may occur, leading to a fire in addition to electrical shocks and death or serious injury.

■ **Avoiding battery fires or explosions**

Observe the following precautions to prevent accidentally igniting the flammable gas that may be emitted from the battery:

- Make sure each jumper cable is connected to the correct terminal and that it is not unintentionally in contact with any other than the intended terminal.
- Do not allow the other end of the jumper cable connected to the “+” terminal to come into contact with any other parts or metal surfaces in the area, such as brackets or unpainted metal.
- Do not allow the + and - clamps of the jumper cables to come into contact with each other.
- Do not smoke, use matches, cigarette lighters or allow open flame near the battery.

Not for Reproduction

WARNING

■ **Battery precautions**

The battery contains poisonous and corrosive acidic electrolyte, while related parts contain lead and lead compounds. Observe the following precautions when handling the battery:

- When working with the battery, always wear safety glasses and take care not to allow any battery fluids (acid) to come into contact with skin, clothing or the vehicle body.
- Do not lean over the battery.
- In the event that battery fluid comes into contact with the skin or eyes, immediately wash the affected area with water and seek medical attention. Place a wet sponge or cloth over the affected area until medical attention can be received.
- Always wash your hands after handling the battery support, terminals, and other battery-related parts.
- Do not allow children near the battery.

■ **When exchanging the battery**

- When the vent plug and indicator are close to the hold down bracket, the battery fluid (sulfuric acid) may leak.
- For information regarding battery replacement, contact your Toyota dealer.

■ **To prevent damage to the vehicle (vehicles with manual transmission)**

Do not pull- or push-start the vehicle as the three-way catalytic converter or catalytic converter may overheat and become a fire hazard.

NOTICE

■ **When handling jumper cables**

When connecting the jumper cables, ensure that they do not become entangled in the cooling fan or belt.

Not for Reproduction

If your vehicle overheats

The following may indicate that your vehicle is overheating.

- The needle of the engine coolant temperature gauge (→P. 82) enters the red zone or a loss of engine power is experienced. (For example, the vehicle speed does not increase.)
- Steam comes out from under the hood.

Correction procedures

1 Stop the vehicle in a safe place and turn off the air conditioning system, and then stop the engine.

2 If you see steam:
Carefully lift the hood after the steam subsides.

If you do not see steam:
Carefully lift the hood.

3 After the engine has cooled down sufficiently, inspect the hoses and radiator core (radiator) for any leaks.

① Radiator

② Cooling fan

If a large amount of coolant leaks, immediately contact your Toyota dealer.

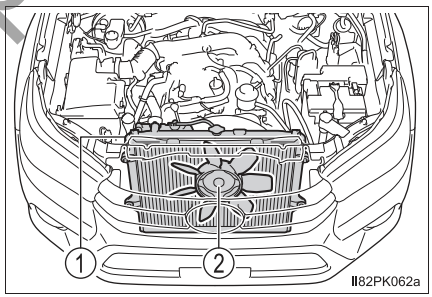

Not for Reproduction

4 The coolant level is satisfactory if it is between the “F” and “L” lines on the reservoir.

① Reservoir

② “F” line

③ “L” line

④ Radiator cap (if equipped)

▶ 1GR-FE engine

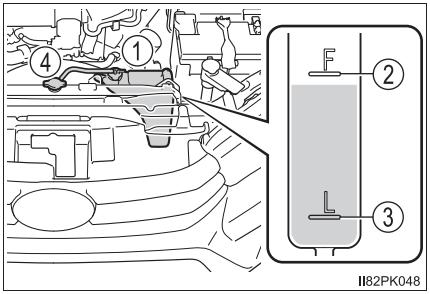

▶ 2TR-FE engine

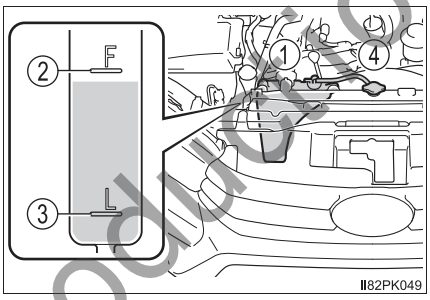

▶ 1GD-FTV and 2GD-FTV engines

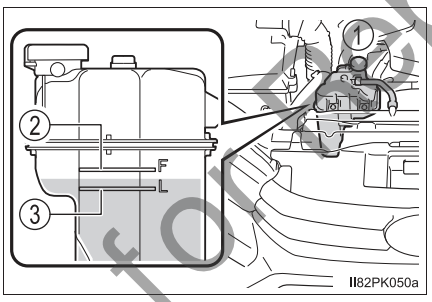

Not for Reproduction

5 Add engine coolant if necessary. (→P. 519)

Water can be used in an emergency if engine coolant is unavailable.

▶ 1GR-FE engine

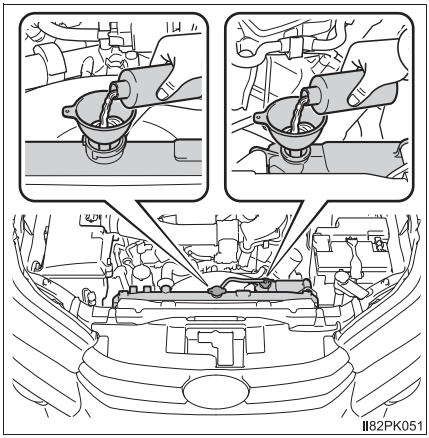

▶ 2TR-FE engine

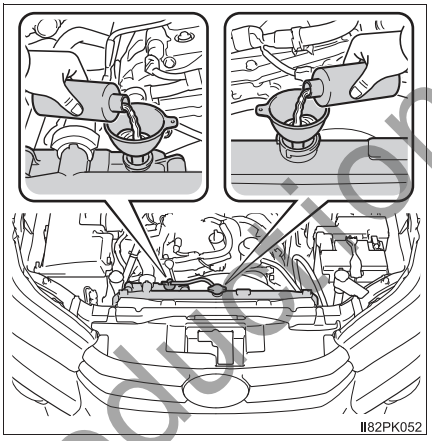

▶ 1GD-FTV and 2GD-FTV engines

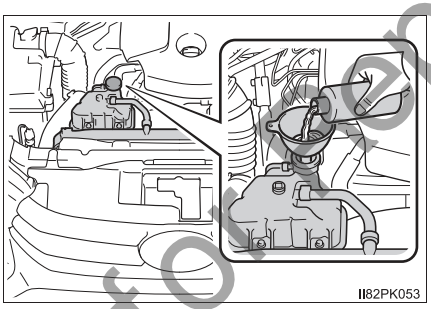

6 Start the engine to check that the radiator cooling fan operates and to check for coolant leaks from the radiator or hoses.

7 If the fan is not operating:
Stop the engine immediately and contact your Toyota dealer.
If the fan is operating:
Have the vehicle inspected at the nearest Toyota dealer.

Not for reproduction

WARNING

■ **When inspecting under the hood of your vehicle**

Observe the following precautions.
Failure to do so may result in serious injury such as burns.

- If steam is seen coming from under the hood, do not open the hood until the steam has subsided. The engine compartment may be very hot.
- Keep hands and clothing (especially a tie, a scarf or a muffler) away from the fans and belts. Failure to do so may cause the hands or clothing to be caught, resulting in serious injury.
- Do not loosen the radiator cap or the coolant reservoir cap while the engine and radiator are hot. High temperature steam or coolant could spray out.

NOTICE

■ **When adding engine coolant**

Add coolant slowly after the engine has cooled down sufficiently. Adding cool coolant to a hot engine too quickly can cause damage to the engine.

■ **To prevent damage to the cooling system**

Observe the following precautions:

- Avoid contaminating the coolant with foreign matter (such as sand or dust etc.).
- Do not use any coolant additive.

Not for Reproduction

If you run out of fuel and the engine stalls (diesel engine only)

If you run out of fuel and the engine stalls:

1 Refuel your vehicle.

2 To bleed the fuel system, operate the priming pump until you feel more resistance.

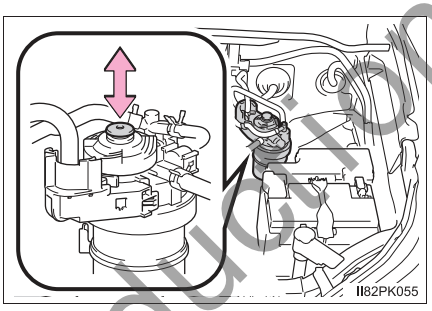

3 Start the engine. (→P. 167, 170)

If the engine does not start after the above steps have been performed, wait for 10 seconds and try steps 2 and 3 again. If the engine still does not start, contact your Toyota dealer.

After starting the engine, depress the accelerator pedal lightly until the engine runs smoothly.

NOTICE

■ **When restarting the engine**

- Do not crank the engine before refueling and operating the priming pump. This may damage the engine and fuel system.
- Do not crank the engine for more than 30 seconds at a time. This may overheat the starter and wiring system.

Not for Reproduction

If the vehicle becomes stuck

Carry out the following procedures if the tires spin or the vehicle becomes stuck in mud, dirt or snow:

1. Stop the engine. Set the parking brake and shift the shift lever to P (automatic transmission) or N (manual transmission).
2. Remove the mud, snow or sand from around the stuck tire.
3. Place wood, stones or some other material under the tires to help provide traction.
4. Restart the engine.
5. Vehicles with rear differential lock system: Lock the rear differential. (→P. 230)
6. Shift the shift lever to the D or R position (automatic transmission) or 1 or R position (manual transmission) and carefully apply the accelerator to free the vehicle.

■When it is difficult to free the vehicle

Press to turn off TRC/A-TRC.

▶ Vehicles without multi-information display

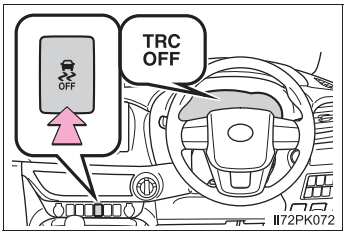

▶ Vehicles with multi-information display

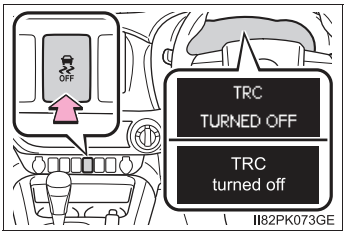

Not for Reproduction

WARNING

■ **When attempting to free a stuck vehicle**

If you choose to push the vehicle back and forth to free it, make sure the surrounding area is clear to avoid striking other vehicles, objects or people. The vehicle may also lunge forward or lunge back suddenly as it becomes free. Use extreme caution.

■ **When shifting the shift lever**

For vehicles with automatic transmission, be careful not to shift the shift lever with the accelerator pedal depressed.
This may lead to unexpected rapid acceleration of the vehicle that may cause an accident resulting in death or serious injury.

NOTICE

■ **To avoid damage to the transmission and other components**

- Avoid spinning the wheels and depressing the accelerator pedal more than necessary.
- If the vehicle remains stuck even after these procedures are performed, the vehicle may require towing to be freed.
- Vehicles with automatic transmission: When the automatic transmission fluid temperature warning light comes on (vehicles without multi-information display) or a warning message for the automatic transmission fluid temperature is displayed (vehicles with multi-information display) while attempting to free a stuck vehicle, immediately remove your foot from the accelerator pedal and wait until the warning light turns off (vehicles without multi-information display) or the warning message disappears (vehicles with multi-information display). Otherwise, the transmission may become damaged.(→P. 184, 463)

Not for Reproduction

Not for Reproduction

Vehicle specifications 9

9-1. Specifications
Maintenance data (fuel, oil level, etc.).....508
Fuel information.....527
9-2. Customization
Customizable features.....529

Not for Reproduction

Maintenance data (fuel, oil level, etc.)

Dimensions

Overall length	Without rear bumper		5265 mm (207.3 in.)*2 5285 mm (208.1 in.)*3
	With rear bumper		5335 mm (210.0 in.)
Overall width	Without over fender		1800 mm (70.9 in.)*4 1815 mm (71.5 in.)*5
	With over fender		1855 mm (73.0 in.)
Overall height*1	2WD models	Single-cab models	1690 mm (66.5 in.)
		Smart-cab models	1695 mm (66.7 in.)
		Double-cab models	1700 mm (66.9 in.)
	4WD models and Pre Runner	Single-cab models	1795 mm (70.7 in.)
		Smart-cab models	1810 mm (71.3 in.)
		Double-cab models	1815 mm (71.5 in.)
Wheelbase	2WD models		3085 mm (121.5 in.)
	4WD models and Pre Runner		3090 mm (121.7 in.)
Front tread	2WD models		1510 mm (59.4 in.)
	4WD models and Pre Runner		1495 mm (58.9 in.)*6 1535 mm (60.4 in.)*7
Rear tread	2WD models		1510 mm (59.4 in.)
	4WD models and Pre Runner		1510 mm (59.4 in.)*6 1550 mm (61.0 in.)*7

Not for Reproduction

*1: Unladen vehicle

*2: With tailgate type A (→P. 114)

*3: With tailgate type B (→P. 114)

*4: Without side step

*5: With side step

*6: With 225/70R17C tires

*7: With 265/65R17 or 265/60R18 tires

Not for Reproduction

Vehicle identification

■ Vehicle identification number

The vehicle identification number (VIN) is the legal identifier for your vehicle. This is the primary identification number for your Toyota. It is used in registering the ownership of your vehicle.

This number is stamped on the rear right frame.

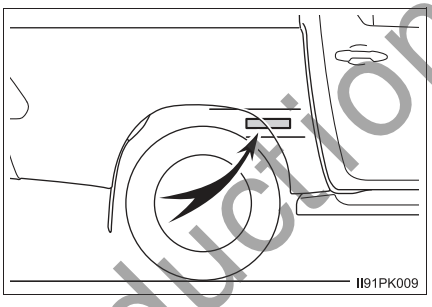

This number is also on the manufacturer's plate.

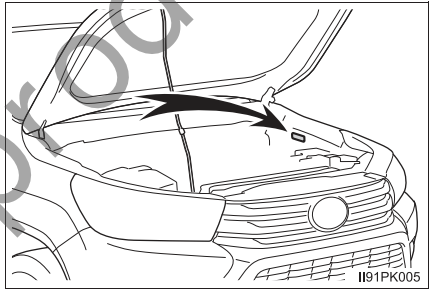

Not for Reproduction

■ Engine number

The engine number is stamped on the engine block as shown.

▶ 1GR-FE engine

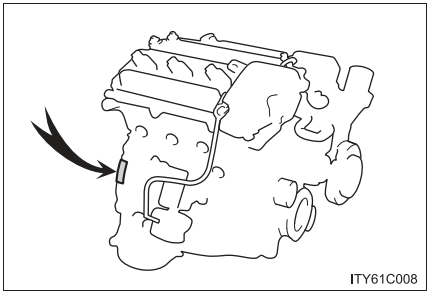

▶ 2TR-FE engine

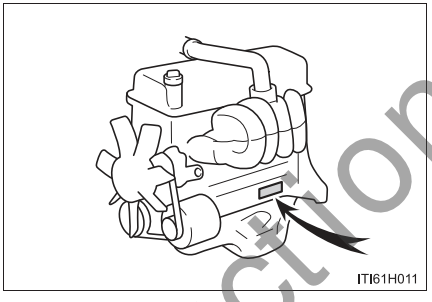

▶ 1GD-FTV and 2GD-FTV engines

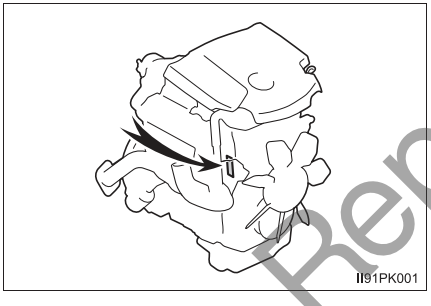

Not for Reproduction

Engine

▶ 1GR-FE engine

Model	1GR-FE
Type	6 cylinder V type, 4 cycle, gasoline
Bore and stroke	94.0 × 95.0 mm (3.70 × 3.74 in.)
Displacement	3956 cm^3 (241.4 cu.in.)
Valve clearance (engine cold)	Intake: 0.15 — 0.25 mm (0.006 — 0.010 in.) Exhaust: 0.29 — 0.39 mm (0.011 — 0.015 in.)
Drive belt tension	Automatic adjustment

▶ 2TR-FE engine

Model	2TR-FE
Type	4 cylinder in line, 4 cycle, gasoline
Bore and stroke	95.0 × 95.0 mm (3.74 × 3.74 in.)
Displacement	2694 cm^3 (164.4 cu.in.)
Valve clearance	Automatic adjustment
Drive belt tension	Automatic adjustment

▶ 1GD-FTV engine

Model	1GD-FTV
Type	4 cylinder in line, 4 cycle, diesel (with turbocharger)
Bore and stroke	92.0 × 103.6 mm (3.62 × 4.08 in.)
Displacement	2755 cm^3 (168.1 cu.in.)
Valve clearance	Automatic adjustment
Drive belt tension	Automatic adjustment

Not for Reproduction

▶ 2GD-FTV engine

Model	2GD-FTV
Type	4 cylinder in line, 4 cycle, diesel (with turbocharger)
Bore and stroke	92.0 × 90.0 mm (3.62 × 3.54 in.)
Displacement	2393 cm^3 (146.0 cu.in.)
Valve clearance	Automatic adjustment
Drive belt tension	Automatic adjustment

Fuel

▶ Gasoline engine

Fuel type		Unleaded gasoline only
Research Octane Number	1GR-FE engine	95 or higher
	2TR-FE engine	91 or higher
Fuel tank capacity (Reference)		80 L (21.1 gal., 17.6 Imp.gal.)

▶ Diesel engine

Fuel type	Diesel fuel only
Cetane number	48 or higher
Fuel tank capacity (Reference)	80 L (21.1 gal., 17.6 Imp.gal.)

Not for Reproduction

Lubrication system

▶ 1GR-FE engine

Oil capacity (Drain and refill — reference*)	
With filter	5.5 L (5.8 qt., 4.8 Imp.qt.)
Without filter	5.2 L (5.5 qt., 4.6 Imp.qt.)

*: The engine oil capacity is a reference quantity to be used when changing the engine oil. Warm up and turn off the engine, wait more than 5 minutes, and check the oil level on the dipstick.

■ Engine oil selection

"Toyota Genuine Motor Oil" is used in your Toyota vehicle. Use Toyota approved "Toyota Genuine Motor Oil" or equivalent to satisfy the following grade and viscosity.

Oil grade:

5W-30 and 10W-30:
API grade SL "Energy-Conserving", SM "Energy-Conserving" or SN "Resource-Conserving"; or ILSAC multigrade engine oil

15W-40
API grade SL, SM or SN multigrade engine oil

Recommended viscosity (SAE):

If you use SAE 10W-30 or a higher viscosity engine oil in extremely low temperatures, the engine may become difficult to start, so SAE 5W-30 engine oil is recommended.

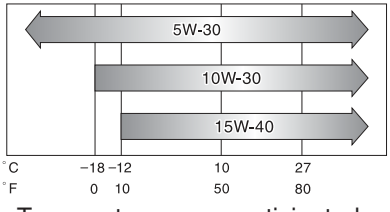

Temperature range anticipated before next oil change

ITIOIL168

Not for Reproduction

Oil viscosity (10W-30 is explained here as an example):

- The 10W in 10W-30 indicates the characteristic of the oil which allows cold startability. Oils with a lower value before the W allow for easier starting of the engine in cold weather.
- The 30 in 10W-30 indicates the viscosity characteristic of the oil when the oil is at high temperature. An oil with a higher viscosity (one with a higher value) may be better suited if the vehicle is operated at high speeds, or under extreme load conditions.

How to read oil container labels:

Either or both API registered marks are added to some oil containers to help you select the oil you should use.

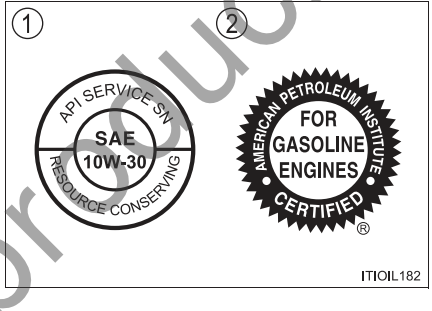

① API Service Symbol

Top portion: “API SERVICE SN” means the oil quality designation by American Petroleum Institute (API).

Center portion: “SAE 10W-30” means the SAE viscosity grade.

Lower portion: “Resource-Conserving” means that the oil has fuel-saving and environmental protection capabilities.

② ILSAC Certification Mark

The International Lubricant Specification Advisory Committee (ILSAC) Certification Mark is displayed on the front of the container.

Not for Reproduction

▶ 2TR-FE engine

Oil capacity (Drain and refill — reference*)	
With filter	5.6 L (5.9 qt., 4.9 Imp.qt.)
Without filter	5.3 L (5.6 qt., 4.7 Imp.qt.)

*: The engine oil capacity is a reference quantity to be used when changing the engine oil. Warm up and turn off the engine, wait more than 5 minutes, and check the oil level on the dipstick.

■ Engine oil selection

"Toyota Genuine Motor Oil" is used in your Toyota vehicle. Use Toyota approved "Toyota Genuine Motor Oil" or equivalent to satisfy the following grade and viscosity.

Oil grade:
0W-20, 5W-20, 5W-30 and 10W-30:
API grade SL "Energy-Conserving", SM "Energy-Conserving" or SN "Resource-Conserving"; or ILSAC multigrade engine oil

15W-40:
API grade SL, SM or SN multigrade engine oil

Recommended viscosity (SAE):

If you use SAE 10W-30 or a higher viscosity engine oil in extremely low temperatures, the engine may become difficult to start, so SAE 0W-20, 5W-20 or 5W-30 engine oil is recommended.

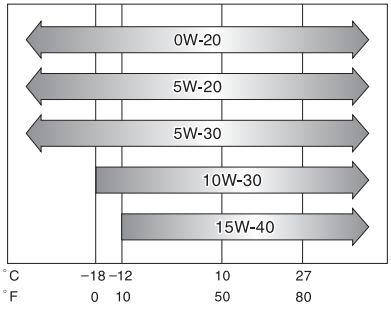

Temperature range anticipated before next oil change

ITIOIL152

Not for Reproduction

Oil viscosity (0W-20 is explained here as an example):

- The 0W in 0W-20 indicates the characteristic of the oil which allows cold startability. Oils with a lower value before the W allow for easier starting of the engine in cold weather.
- The 20 in 0W-20 indicates the viscosity characteristic of the oil when the oil is at high temperature. An oil with a higher viscosity (one with a higher value) may be better suited if the vehicle is operated at high speeds, or under extreme load conditions.

How to read oil container labels:

Either or both API registered marks are added to some oil containers to help you select the oil you should use.

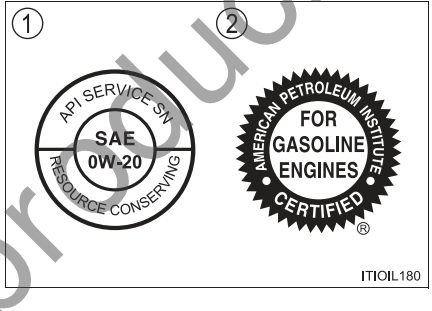

① API Service Symbol

Top portion: “API SERVICE SN” means the oil quality designation by American Petroleum Institute (API).

Center portion: “SAE 0W-20” means the SAE viscosity grade.

Lower portion: “Resource-Conserving” means that the oil has fuel-saving and environmental protection capabilities.

② ILSAC Certification Mark

The International Lubricant Specification Advisory Committee (ILSAC) Certification Mark is displayed on the front of the container.

Not for Reproduction

▶ 1GD-FTV and 2GD-FTV engines

Oil capacity (Drain and refill — reference*)	
With filter	7.5 L (7.9 qt., 6.6 Imp.qt.)
Without filter	7.0 L (7.4 qt., 6.2 Imp.qt.)

*: The engine oil capacity is a reference quantity to be used when changing the engine oil. Warm up and turn off the engine, wait more than 5 minutes, and check the oil level on the dipstick.

■ Engine oil selection

"Toyota Genuine Motor Oil" is used in your Toyota vehicle. Toyota recommends the use of approved "Toyota Genuine Motor Oil". Another motor oil of matching quality can also be used.

Oil grade: ACEA C2

NOTICE

Using engine oil other than ACEA C2 may damage the catalytic converter.

Recommended viscosity (SAE):

SAE 0W-30 is filled into your Toyota vehicle at manufacturing, and the best choice for good fuel economy and good starting in cold weather.

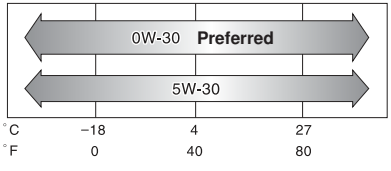

Temperature range anticipated before next oil change

ITIOIL138

Oil viscosity (0W-30 is explained here as an example):

- The 0W in 0W-30 indicates the characteristic of the oil which allows cold startability. Oils with a lower value before the W allow for easier starting of the engine in cold weather.
- The 30 in 0W-30 indicates the viscosity characteristic of the oil when the oil is at high temperature. An oil with a higher viscosity (one with a higher value) may be better suited if the vehicle is operated at high speeds, or under extreme load conditions.

Not for Reproduction

Cooling system

Capacity	1GR-FE engine	9.8 L (10.4 qt., 8.6 Imp.qt.)
	2TR-FE engine	▶ With automatic transmission 8.1 L (8.6 qt., 7.1 Imp.qt.) ▶ With manual transmission 7.8 L (8.2 qt., 6.9 Imp.qt.)
	1GD-FTV and 2GD-FTV engines	▶ With automatic transmission 9.2 L (9.7 qt., 8.1 Imp.qt.) ▶ With manual transmission 8.7 L (9.2 qt., 7.7 Imp.qt.)
Coolant type		Use either of the following: • “Toyota Super Long Life Coolant” • Similar high-quality ethylene glycol-based non-silicate, non-amine, non-nitrite, and non-borate coolant with long-life hybrid organic acid technology Do not use plain water alone.

Not for Reproduction

Ignition system (gasoline engine)

Spark plug	
Make	▶ 1GR-FE engine DENSO K20HR-U11 NGK LFR6C11 ▶ 2TR-FE engine DENSO FK20HR-A8
Gap	▶ 1GR-FE engine 1.1 mm (0.043 in.) ▶ 2TR-FE engine 0.8 mm (0.031 in.)

NOTICE

Iridium-tipped spark plugs (2TR-FE engine)
Use only iridium-tipped spark plugs. Do not adjust the spark plug gap.

Electrical system

Battery	
Specific gravity reading at 20°C (68°F):	1.25 or higher If the specific gravity is lower than the standard value, charge the battery.
Charging rates	
Quick charge	15 A max.
Slow charge	5 A max.

Not for Reproduction

Automatic transmission

Fluid capacity*	2TR-FE engine	8.5 L (9.0 qt., 7.5 Imp.qt.)
	1GR-FE, 1GD-FTV and 2GD-FTV engines	9.5 L (10.0 qt., 8.4 Imp.qt.)
Fluid type		Toyota Genuine ATF WS

*: The fluid capacity is the quantity of reference.
If replacement is necessary, contact your Toyota dealer.

NOTICE

Automatic transmission fluid type

Using transmission fluid other than “Toyota Genuine ATF WS” may cause deterioration in shift quality, locking up of your transmission accompanied by vibration, and ultimately damage the transmission of your vehicle.

Manual transmission

Oil capacity	5-speed models		2.6 L (2.7 qt., 2.3 Imp.qt.)
	6-speed models	4WD models	2.5 L (2.6 qt., 2.2 Imp.qt.)
		Pre Runner	2.7 L (2.9 qt., 2.4 Imp.qt.)
Oil type			TOYOTA Genuine Manual Transmission Gear Oil API GL-3 (GL-4) or equivalent
Recom-mended oil viscosity	Above -10°C (14°F):	5-speed models	SAE 75W-90, 80W or 80W-90
		6-speed models	SAE 75W-90 or 80W-90
	Below -10°C (14°F):		SAE 75W-90

NOTICE

Manual transmission gear oil

Please be aware that depending on the particular characteristics of the gear oil used or the operating conditions, idle sound, shift feeling and/or fuel efficiency may be different or affected. Toyota recommends to use “TOYOTA Genuine Manual Transmission Gear Oil” to achieve optimal performance

Not for Reproduction

Transfer (4WD models)

Oil capacity	1.0 L (1.1 qt., 0.9 Imp.qt.)
Oil type*	Toyota Genuine Transfer Gear oil LF or equivalent
Recommended oil viscosity	SAE 75W

*: Your Toyota vehicle is filled with “Toyota Genuine Transfer Gear oil LF” at the factory. Use Toyota approved “Toyota Genuine Transfer Gear oil LF” or an equivalent oil of matching quality that satisfies the above specifications. Please contact your Toyota dealer for further details.

Differential

Oil capacity	Front (4WD models)		1.60 L (1.69 qt., 1.41 Imp.qt.)
	Rear	Without rear differential lock system	3.65 L (3.86 qt., 3.21 Imp.qt.)
		With rear differential lock system	3.60 L (3.80 qt., 3.17 Imp.qt.)
Oil type* and oil viscosity			Toyota Genuine Differential gear oil LT 75W-85 GL-5 or equivalent

*: Your Toyota vehicle is filled with “Toyota Genuine Differential Gear Oil” at the factory. Use Toyota approved “Toyota Genuine Differential Gear Oil” or an equivalent oil of matching quality that satisfies the above specifications. Please contact your Toyota dealer for further details.

Clutch (vehicles with manual transmission)

Pedal free play	5 — 15 mm (0.2 — 0.6 in.)
Fluid type	SAE J1703 or FMVSS No.116 DOT 3 or SAE J1704 or FMVSS No.116 DOT 4

Not for Reproduction

Brakes

Pedal clearance*1	2WD models	87 mm (3.4 in.)
	4WD models and Pre Runner	90 mm (3.5 in.)
Pedal free play		1.0 — 6.0 mm (0.04 — 0.24 in.)
Parking brake lever travel*2		7 — 9 clicks
Fluid type		SAE J1703 or FMVSS No.116 DOT 3 or SAE J1704 or FMVSS No.116 DOT 4

*1: Minimum pedal clearance when depressed with a force of 490 N (50 kgf, 110 lbf) while the engine is running.

*2: Parking brake lever travel when pulled up with a force of 200 N (20 kgf, 45 lbf)

Chassis lubrication

Propeller shafts	Front (4WD models)	Spider	Lithium base chassis grease, NLGI No.2
		Slide yoke	Molybdenum-disulfide lithium base chassis grease, NLGI No.2 or lithium base chassis grease, NLGI No.2
	Rear	Spider*	Lithium base chassis grease, NLGI No.2

*: With grease fitting only

Steering

Free play	Less than 30 mm (1.2 in.)
Power steering fluid type	Automatic transmission fluid DEXRON® II or III

Not for Reproduction

Tires and wheels

▶ 16 inch tires

Tire size		215/65R16C 106/104S		
Tire inflation pressure (Recommended cold tire inflation pressure)		Front wheel kPa (kgf/cm^2 or bar, psi)	Rear wheel (unladen) kPa (kgf/cm^2 or bar, psi)	Rear wheel (full load) kPa (kgf/cm^2 or bar, psi)
	Single-cab models	240 (2.4, 35)	290 (2.9, 42)	370 (3.7, 54)
	Smart-cab and double-cab models	240 (2.4, 35)	290 (2.9, 42)	350 (3.5, 51)
Wheel size		16 × 6J		
Wheel nut torque		▶ Steel wheels 152 N•m (15.5 kgf•m, 112 ft•lbf) ▶ Aluminum wheels 121 N•m (12.3 kgf•m, 89 ft•lbf)		

▶ 17 inch tires (type A)

Tire size	225/70R17C 108/106S		
Tire inflation pressure (Recommended cold tire inflation pressure)	Front wheel kPa (kgf/cm^2 or bar, psi)	Rear wheel (unladen) kPa (kgf/cm^2 or bar, psi)	Rear wheel (full load) kPa (kgf/cm^2 or bar, psi)
	240 (2.4, 35)	240 (2.4, 35)	300 (3.0, 44)
Wheel size	17 × 6J		
Wheel nut torque	105 N•m (10.7 kgf•m, 77 ft•lbf)		

Not for Reproduction

▶ 17 inch tires (type B)

Tire size	265/65R17 112S			
Tire inflation pressure (Recommended cold tire inflation pressure)	Front wheel (unladen) kPa (kgf/cm^2 or bar, psi)	Front wheel (full load) kPa (kgf/cm^2 or bar, psi)	Rear wheel (unladen) kPa (kgf/cm^2 or bar, psi)	Rear wheel (full load) kPa (kgf/cm^2 or bar, psi)
	200 (2.0, 29)	230 (2.3, 33)	200 (2.0, 29)	250 (2.5, 36)
Wheel size	17 × 7 1/2J			
Wheel nut torque	105 N•m (10.7 kgf•m, 77 ft•lbf)			

▶ 18 inch tires

Tire size	265/60R18 110H			
Tire inflation pressure (Recommended cold tire inflation pressure)	Front wheel (unladen) kPa (kgf/cm^2 or bar, psi)	Front wheel (full load) kPa (kgf/cm^2 or bar, psi)	Rear wheel (unladen) kPa (kgf/cm^2 or bar, psi)	Rear wheel (full load) kPa (kgf/cm^2 or bar, psi)
	200 (2.0, 29)	230 (2.3, 33)	200 (2.0, 29)	250 (2.5, 36)
Wheel size	18 × 7 1/2J			
Wheel nut torque	105 N•m (10.7 kgf•m, 77 ft•lbf)			

Not for Reproduction

Light bulbs

	Light bulbs	W	Type
Exterior	Headlights High/low beams (halogen headlights) High beams (LED headlights)	 60/55 60	 A B
	Halogen fog lights*	19	C
	Front position lights/daytime running lights (halogen headlights)	21/5	D
	Front turn signal lights Halogen headlights LED headlights	 21 21	 E F
	Rear turn signal lights	21	E
	Back-up lights	21	G
	License plate light	5	D
	Stop/tail lights	21/5	G
Interior	Interior light*	8	H
	Personal/interior lights	8	D

A: H4 halogen bulbs
B: HB3 halogen bulbs
C: H16 halogen bulbs
D: Wedge base bulbs (clear)
E: Single end bulbs (amber)
F: Wedge base bulbs (amber)
G: Single end bulbs (clear)
H: Double end bulbs

*: If equipped

Not for Reproduction

Fuel information

◆ Gasoline engine

▶ 1GR-FE engine

You must only use unleaded gasoline.
Select premium unleaded gasoline with a Research Octane Number of 95 or higher for optimum engine performance.
If this premium type cannot be obtained, you may temporarily use unleaded gasoline with a Research Octane Number as low as 91.

▶ 2TR-FE engine

You must only use unleaded gasoline.
Select unleaded gasoline with a Research Octane Number of 91 or higher for optimum engine performance.

◆ Diesel engine

You must only use diesel fuel with a cetane number of 48 or higher.

■ Use of ethanol blended gasoline in a gasoline engine

Toyota allows the use of ethanol blended gasoline where the ethanol content is up to 10%. Make sure that the ethanol blended gasoline to be used has a Research Octane Number that follows the above.

■ If you plan to drive in foreign countries (diesel engine)

Low sulfur diesel fuel may not be available, so please check the availability with your distributor.

■ If your engine knocks

- Consult your Toyota dealer.
- You may occasionally notice light knocking for a short time while accelerating or driving uphill. This is normal and there is no need for concern.

Not for Reproduction

NOTICE

■ **Notice on gasoline fuel quality**

- Do not use improper fuels. If improper fuels are used, the engine will be damaged.
- Do not use leaded gasoline.
  Leaded gasoline will cause the three-way catalytic converter to lose its effectiveness and the emission control system to function improperly.
- Do not use the methanol blended gasoline such as M15, M85, M100. The use of gasoline containing methanol may cause engine damage or failure.

■ **Notice on diesel fuel quality**

- Do not use improper fuels. If improper fuels are used, the engine will be damaged.
- Do not use a fuel that contains more than 10 ppm of sulfur.
  Use of such a high sulfur fuel may damage the engine.
- FAME (Fatty Acid Methyl Ester) fuel sold under names such as “B30” or “B100” and fuel containing a large amount of FAME should not be used.
  Your vehicle can use diesel mixed with 5% max biodiesel FAME (B5).
  The use of fuel with more than 5% FAME content (B5) will damage the vehicle’s fuel system. You must ensure that refueling is carried out only from a source where fuel specification and quality can be guaranteed. In case of any doubt, ask your Toyota dealer.

Not for Reproduction

Customizable features

Your vehicle includes a variety of electronic features that can be personalized to your preferences. The settings of these features can be changed using the multi-information display or at your Toyota dealer.

Some function settings are changed simultaneously with other functions being customized. Contact your Toyota dealer for further details.

Customizing vehicle features

■ Changing using the multi-information display

▶ Vehicles with multi-information display type A

1. Press the “DISP” button to display the “SETTINGS” screen while the vehicle is stopped, and then press and hold the “DISP” button to display the customize mode screen.
2. Press the “DISP” button and select the item, and then press and hold the “DISP” button.
3. Press the “DISP” button and select the desired setting, and then press and hold the “DISP” button.

To exit the customize mode, press the “DISP” button to select the “EXIT”, and then press and hold the “DISP” button.

▶ Vehicles with multi-information display type B

1. Use the meter control switches to select ⚙ while the vehicle is stopped, and then press ⊙ to display the customize mode screen.
2. Select the desired item, and then press ⊙.
3. Select the desired setting, and then press ⊙.

To go back to the previous screen or exit the customize mode, press ↩.

Not for Reproduction

Customizable features

① Settings that can be changed using the multi-information display

② Settings that can be changed by your Toyota dealer

Definition of symbols: O = Available, – = Not available

■ Gauges, meters and multi-information display*1 (→P. 87, 91)

▶ Vehicles with multi-information display type A

Function*2	Default setting	Customized setting	①	②
Units	km (L/100 km)	km (km/L)	O	–
Eco Driving Indicator Light	On (Self-lighting)	Off	O	–

▶ Vehicles with multi-information display type B

Function*2	Default setting	Customized setting	①	②
Units	km (L/100 km)	km (km/L)	O	–
Eco Driving Indicator Light	On (Self-lighting)	Off	O	–
switch settings	Drive information 1	Desired status screen*3	O	–
Drive information 1	Current fuel economy	*4	O	–
	Average fuel economy		O	–
Drive information 2	Distance to empty	*4	O	–
	Average speed		O	–
Pop-up display	On	Off	O	–
Accent color	Light blue	Blue	O	–
		Orange		
		Yellow		

Not for Reproduction

Function		Default setting	Customized setting	①	②
Eco Saving*1	Fuel consumption comparison	10.0	*5	O	–
	Fuel price	150	*5	O	–
	Currency	(No currency unit)	$ (Dollar)	O	–

*1: If equipped

*2: For details about each function: →P. 87, 91

*3: Some status screens cannot be registered (indicated on multi-information display).

*4: Customized items are the following items except for default setting items: current fuel economy (bar type), current fuel economy (value type), average fuel economy (after reset), average fuel economy (after start), average fuel economy (after refuel), average speed (after reset), average speed (after start), elapsed time (after reset), elapsed time (after start), distance (range), distance (after start), blank.

*5: The values can be changed using the meter control switches.

■ Smart entry & start system* (→P. 116)

Function	Default setting	Customized setting	①	②
Smart entry & start system	On	Off	–	O
Operational signal (buzzer)*	Level 7	Off	–	O
		Level 1 to 6		

*: If equipped

■ Automatic light control system (→P. 194)

Function	Default setting	Customized setting	①	②
Light sensor sensitivity	Standard	-2 to 2	–	O

Not for Reproduction

■ Turn signal lever (→P. 192)

Function	Default setting	Customized setting	①	②
Times of flashing of the lane change signal flashers	3	4	–	O
		5		
		6		
		7		
		Off		

WARNING

■ During customization

As the engine needs to be running during customization, ensure that the vehicle is parked in a place with adequate ventilation. In a closed area such as a garage, exhaust gases including harmful carbon monoxide (CO) may collect and enter the vehicle. This may lead to death or a serious health hazard.

NOTICE

■ During customization

To prevent battery discharge, ensure that the engine is running while customizing features.

Not for Reproduction

Index

What to do if...
(Troubleshooting) 534
Alphabetical index 538

Not for Reproduction

For vehicles with navigation system or multimedia system, refer to the “Navigation and Multimedia System Owner’s Manual” for information regarding the equipment listed below.

- Navigation system
- Audio/visual system

What to do if... (Troubleshooting)

If you have a problem, check the following before contacting your Toyota dealer.

The doors cannot be locked, unlocked, opened or closed

You lose your keys

- If you lose your keys or mechanical keys, new genuine keys or mechanical keys can be made by your Toyota dealer. (→P. 105)
- Vehicles with smart entry & start system:
  If you lose your electronic keys, the risk of vehicle theft increases significantly. Contact your Toyota dealer immediately. (→P. 106)

The doors cannot be locked or unlocked

- Is the key battery weak or depleted? (→P. 425)
- Vehicles with smart entry & start system:
  Is the engine switch in IGNITION ON mode?
  When locking the doors, turn the engine switch off. (→P. 173)
- Vehicles with smart entry & start system:
  Is the electronic key left inside the vehicle?
  When locking the doors, make sure that you have the electronic key on your person.
- The function may not operate properly due to the condition of the radio wave. (→P. 111, 119)

The rear door cannot be opened (vehicles with rear door child-protector lock)

- Is the rear door child-protector lock set?
  The rear door cannot be opened from inside the vehicle when the lock is set. Open the rear door from outside and then unlock the rear door child-protector lock. (→P. 110)

Not for Reproduction

If you think something is wrong

The engine does not start (vehicles without smart entry & start system)

- Vehicles with manual transmission:
  Do you turn the key with the clutch pedal depressed firmly? (→P. 167)
- Vehicles with automatic transmission:
  Is the shift lever in P? (→P. 167)
- Is the steering wheel unlocked? (→P. 169)
- Is the battery discharged? (→P. 494)

The engine does not start (vehicles with smart entry & start system)

- Did you press the engine switch while firmly depressing the brake pedal? (→P. 170)
- Vehicles with automatic transmission:
  Is the shift lever in P? (→P. 170)
- Is the electronic key anywhere detectable inside the vehicle? (→P. 117)
- Is the steering wheel unlocked? (→P. 175)
- Is the electronic key battery weak or depleted?
  In this case, the engine can be started in a temporary way. (→P. 491)
- Is the battery discharged? (→P. 494)

The shift lever cannot be shifted from P even if you depress the brake pedal (vehicles with automatic transmission)

- Vehicles without smart entry & start system:
  Is the engine switch in the “ON” position?
  If you cannot release the shift lever by depressing the brake pedal with the engine switch in the “ON” position: →P. 183
- Vehicles with smart entry & start system:
  Is the engine switch in IGNITION ON mode?
  If you cannot release the shift lever by depressing the brake pedal with the engine switch in IGNITION ON mode: →P. 183

Not for Reproduction

The steering wheel cannot be turned after the engine is stopped

- Vehicles without smart entry & start system:
  It is locked to prevent theft of the vehicle if the key is removed from the engine switch. (→P. 169)
- Vehicles with smart entry & start system:
  It is locked automatically to prevent theft of the vehicle. (→P. 175)

The windows do not open or close by operating the power window switches (if equipped)

- Is the window lock switch pressed?
  The power window except for the one at the driver's seat cannot be operated if the window lock switch is pressed. (→P. 138)

The engine switch is turned off automatically (vehicles with smart entry & start system)

- The auto power off function will be operated if the vehicle is left in ACCESSORY or IGNITION ON mode (the engine is not operating) for a period of time. (→P. 174)

A warning buzzer sounds during driving

- The seat belt reminder light is flashing
  Are the driver and passengers wearing the seat belts? (→P. 464)
- The parking brake indicator light is on
  Is the parking brake released? (→P. 193)

Depending on the situation, other types of warning buzzer may also sound. (→P. 461, 469)

An alarm is activated and the horn sounds (if equipped)

- Did anyone inside the vehicle open a door during setting the alarm?
  The sensor detects it and the alarm sounds. (→P. 73)

To stop the alarm, turn the engine switch to IGNITION ON mode or start the engine.

Not for Reproduction

A warning buzzer sounds when leaving the vehicle (vehicles with smart entry & start system)

- Is the message displayed on the multi-information display?
  Check the message on the multi-information display.

A warning light turns on or a warning message is displayed

- When a warning light turns on or a warning message is displayed, refer to P. 461, 469.

When a problem has occurred

If you have a flat tire

- Stop the vehicle in a safe place and replace the flat tire with the spare tire. (→P. 474)

The vehicle becomes stuck

- Try the procedure for when the vehicle becomes stuck in mud, dirt, or snow. (→P. 504)

Not for Reproduction

Alphabetical index

A

A/C.....360, 365
Air conditioning filter.....423
Automatic air conditioning system.....365
Manual air conditioning system.....360
ABS (Anti-lock Brake System).....234
Function.....234
Warning light.....462
Access panels.....112
Air conditioning filter.....423
Air conditioning system.....360, 365
Air conditioning filter.....423
Automatic air conditioning system.....365
Manual air conditioning system.....360
Airbags.....35
Airbag operating conditions.....41
Airbag precautions for your child.....37
Airbag warning light.....462
Correct driving posture.....28
Curtain shield airbag operating conditions.....41
Curtain shield airbag precautions.....39
General airbag precautions.....37
Locations of airbags.....35
Modification and disposal of airbags.....40
Side airbag operating conditions.....41
Side airbag precautions.....39
Side and curtain shield airbags operating conditions.....41
Side and curtain shield airbags precautions.....39
SRS airbags.....35
Alarm.....73
Antenna.....286
Antennas (smart entry & start system).....116
Anti-lock brake system (ABS).....234
Function.....234
Warning light.....462
Armrest.....388
Audio input.....265
Automatic air conditioning system
Air conditioning filter.....423
Automatic air conditioning system.....365
Automatic disconnecting differential.....220
Automatic light control system.....196
Automatic transmission.....178
If the shift lever cannot be shifted from P.....183
AUX port*.....265
Auxiliary boxes.....380

Not for Reproduction

B

Back-up lights
Replacing light bulbs 444
Wattage 526
Battery
Battery checking 410
If the vehicle battery is discharged 494
Preparing and checking before winter 250
Warning light 461
Bluetooth®* 354
Audio system 320
Hands-free system (for cellular phone) 322
Registering/removing a Bluetooth® device 310
Selecting a Bluetooth® device 312
Wireless communication 304
Bluetooth® audio* 320
Bottle holders 379
Brake
Fluid 523
Override system warning light 464
Parking brake 193
Warning light 461
Warning messages 461
Brake assist 234
Break-in tips 147
Brightness control
Instrument panel light control 84

C

Care
Aluminum wheels 391
Exterior 390
Interior 393
Seat belts 394
CD player* 287
Chains 251
Child restraint system 47
Child seats definition 49
Child seats installation 59, 67
Installing CRS with ISOFIX rigid anchor 64
Installing CRS with seat belts 55
Installing CRS with upper anchorage strap 68
Child safety 46
Airbag precautions 37
Battery precautions 413, 498
Child restraint system 47
How your child should wear the seat belt 32
Installing child restraints ... 59, 67
Power window lock switch 138
Power window precautions ... 140
Rear door child-protectors 110
Removed key battery precautions 427
Seat belt precautions 34
Seat heater precautions 372

*: Refer to “Navigation and Multimedia System Owner’s Manual”.

Not for Reproduction

Child-protectors **110**
Cleaning **390, 393**
Aluminum wheels 391
Exterior 390
Interior 393
Seat belts 394
Clock **385**
Clutch **522**
Coat hooks **388**
Condenser **410**
Console box **377**
Cooling system
Engine overheating 499
Cruise control **206**
Warning light 464
Cup holders **378**
Curtain shield airbags **35**

D

DAC **241**
Daytime running light system **196**
Deck hooks **383**
Defogger
Rear window 361
Windshield 361, 367
Differential
Oil 522
Dimension **508**
Display
Multi-information display 87, 91
Trip information 88, 93
Do-it-yourself maintenance **398**
Doors
Door glasses 137
Door lock 107
Open door warning light 464
Outside rear view mirrors 134
Rear door child-protectors 110
Side doors 107
Downhill assist control system **241**
DPF (Diesel Particulate Filter) system
Warning lights 469
Warning messages 464
Driver's seat belt reminder light **464**
Driving
Break-in tips 147
Correct posture 28
Procedures 144
Winter drive tips 250

Not for Reproduction

E

Eco Driving Indicator.....79, 80
EDR (Event data recorder).....10
Electronic key
If the electronic key does not operate properly 490
Replacing the battery 425
Emergency flashers.....450
Emergency, in case of
If a warning buzzer sounds 461
If a warning light turns on.....461
If the electronic key does not operate properly 490
If the engine will not start 488
If the vehicle battery is discharged.....494
If you have a flat tire.....474
If you lose your keys 105
If you run out of fuel and the engine stalls.....503
If you think something is wrong.....459
If your vehicle becomes stuck 504
If your vehicle has to be stopped in an emergency.....451
If your vehicle needs to be towed.....453
If your vehicle overheats.....499
Engine
"ACC" position 168
Compartment.....402
Engine switch.....167, 170
Hood 400
How to start the engine.....167, 170
Identification number.....511
If the engine will not start.....488
If you run out of fuel and the engine stalls 503
If your vehicle has to be stopped in an emergency.....451
Ignition switch (engine switch) 167, 170
Overheating 499
Engine coolant
Capacity.....519
Checking.....408
Preparing and checking before winter.....250
Engine coolant temperature gauge.....84
Engine immobilizer system 71
Engine oil
Capacity.....514
Checking.....405
Oil pressure warning light 461
Preparing and checking before winter.....250
Engine switch (ignition switch).....167, 170
Auto power off function.....174
Changing the engine switch modes.....173
Changing the engine switch position.....168
If your vehicle has to be stopped in an emergency.....451
Starting the engine.....167, 170

Not for Reproduction

Engine switch light (ignition switch light) 373
Event data recorder (EDR) 10

F

Flat tire 474
Floor mat 26
Fluid
Automatic transmission 521
Brake 523
Clutch 522
Steering 523
Transfer 522
Washer 414
Four-wheel drive system
Front-wheel drive control switch 220
Warning light 463
Fog lights
Replacing light bulbs 441
Switch 198
Wattage 526
Front position lights
Light switch 194
Replacing light bulbs 437
Wattage 526
Front seats
Adjustment 123
Cleaning 393
Correct driving posture 28
Head restraints 128
Seat heaters 372
Front turn signal lights
Replacing light bulbs 438
Turn signal lever 192
Wattage 526
Fuel
Capacity 513
Fuel filter 415
Fuel gauge 83
Fuel pump shut off system 460
If you run out of fuel and the engine stalls 503
Information 527
Refueling 201
Type 513
Warning light 463
Fuel consumption information 99
Fuel filler door 201
Refueling 201
Fuel filter 415, 463
Fuel pump shut off system 460
Fuses 428

G

Gauges 82
Glove box 377
Grocery bag hooks 387

H

Hands-free system (for cellular phone)* 322
Head restraints 128
Headlights 194
Light switch 194
Replacing light bulbs 435
Wattage 526
Heaters
Automatic air conditioning system 365
Manual air conditioning system 360
Seat heaters 372

Not for Reproduction

High mounted stoplight
Replacing 446
Hill-start assist control 234
Hood 400
Hooks
Coat hooks 388
Grocery bag hooks 387
Retaining hooks (floor mat) 26
Horn 132

I

Identification
Engine 511
Vehicle 510
Ignition switch (engine switch) 167, 170
Auto power off function 174
Changing the engine switch modes 173
Changing the engine switch position 168
If your vehicle has to be stopped in an emergency 451
Starting the engine 167, 170
Ignition switch light (engine switch light) 373
Illuminated entry system 375
Immobilizer system 71
Indicators 76
Inside rear view mirror 133
Instrument panel light control 84
Intercooler 410
Interior lights 373
Switch 374
Wattage 526

J

Jack
Vehicle-equipped jack 475
Jack handle 479
Jam protection function
Power windows 138

K

Keyless entry
Smart entry & start system ... 107
Wireless remote control 103
Keys 102
Electronic key 102
Engine switch 167
If the electronic key does not operate properly 490
If you lose your keys 105
Key number plate 102
Keyless entry 103
Keys 102
Replacing the battery 425
Wireless remote control key 103

L

Lever
Auxiliary catch lever 400
Hood lock release lever 400
Shift lever 178, 186
Turn signal lever 192
Wiper lever 199
License plate light
Light switch 194
Replacing light bulb 445
Wattage 526

*: Refer to “Navigation and Multimedia System Owner’s Manual”.

Not for Reproduction

Light
Engine switch light 373
Fog light switch 198
Headlight switch 194
Illuminated entry system 375
Interior lights 374
Interior light list 373
Personal light 374
Replacing light bulbs 433
Turn signal lever 192
Wattage 526
Light bulbs
Replacing 433
Wattage 526
Lock steering column..... 169, 175

M

Maintenance
Do-it-yourself maintenance ... 398
Maintenance data 508
Maintenance requirements ... 396
Malfunction indicator lamp..... 462
Manual headlight leveling dial 195
Manual transmission 186
Master warning light..... 465
Meter
Indicators 76
Instrument panel light control 84
Meters 82
Multi-information display 87, 91
Warning lights 461
Microphone 323
Mirrors
Inside rear view mirror 133
Outside rear view mirrors 134
Vanity mirror 384
MP3 disc* 287
Multi-information display
Drive information 93
Language 530
Switching the display 88
Trip information 88, 93
Warning messages 469
Multimedia system* 258
Basic Audio Operations 267
CD player 287
iPod 293
Listening to Bluetooth® Audio 320
Radio 285
Steering wheel audio switches 264
USB memory 298
USB port/AUX Port 265
Using a Bluetooth® Phone 322
Using the AUX port 302

N

Navigation system*

O

Odometer..... 83
Oil
Differential oil 522
Engine oil 514
Manual transmission oil 521
Transfer oil 522
Opener
Fuel filler door 201
Hood 400
Outside rear view mirrors 134
Adjusting and folding 134
Outside temperature display 83
Overhead console 380
Overheating, Engine..... 499

Not for Reproduction

P

Parking brake
Operation 193
Parking brake engaged warning buzzer 461
Personal light 374
Switch 374
Wattage..... 526
Power outlets 386
Power steering
Fluid 523
Power windows
Jam protection function..... 138
Operation 137
Window lock switch..... 138

Q

Quarter windows..... 141

R

Radiator 410
Radio* 285
Radio data system* 286
RDS* 286
Rear differential lock system 230
Rear passengers' seat belt reminder light 464
Rear seat
Removing the rear seat cushions 125
Raising the bottom cushion 125
Rear step bumper 115
Rear turn signal lights
Replacing light bulbs..... 444
Turn signal lever 192
Wattage..... 526
Rear view mirror
Inside rear view mirror 133
Outside rear view mirrors..... 134
Rear view monitor system 210
Rear window defogger 361, 367
Refueling 201
Capacity..... 513
Fuel types 513
Opening the fuel tank cap..... 201
Replacing
Electronic key battery 425
Fuses 428
Light bulbs 433
Tires..... 474
Wireless remote control battery 425

S

Seat belts..... 30
Adjusting the seat belt 31
Child restraint system installation 47
Cleaning and maintaining the seat belt..... 394
Emergency Locking Retractor..... 32
How to wear your seat belt 30
How your child should wear the seat belt..... 32
Pregnant women, proper seat belt use 33
Reminder light and buzzer..... 464
Seat belt pretensioners..... 31
SRS warning light 462
Seat heaters 372

*: Refer to "Navigation and Multimedia System Owner's Manual".

Not for Reproduction

Seats
Adjustment 123
Adjustment precautions 124
Child seats/child restraint system installation 47
Cleaning 393
Head restraint 128
Properly sitting in the seat 28
Raising the bottom cushion 125
Removing the rear seat cushions 125
Seat heaters 372
Sensor
Automatic headlight system 196
Service reminder indicators 76
Shift lever
Automatic transmission 178
Front-wheel drive control switch 220
If the shift lever cannot be shifted from P 183
Manual transmission 186
Shift lock system 182
Side airbags 35
Side doors 107
Side mirrors 134
Adjusting and folding 134
Side turn signal lights
Replacing light bulbs 446
Turn signal lever 192
Smart entry & start system 116
Antenna location 116
Entry functions 107
Starting the engine 170
Warning message 469
Snow tires 250
Spare tire
Inflation pressure 524
Storage location 474
Spark plug 520
Specifications 508
Speedometer 83
Steering
Column lock release 169, 175
Fluid 523
Steering wheel
Adjustment 131
Audio switches 264
Meter control switches 92
Telephone switches 337
Stop lights
Replacing light bulbs 444
Wattage 526
Storage feature 376
Storage precautions 376
Stuck
If your vehicle becomes stuck 504
Sun visors 384
Switch
Audio remote control switches 264
Cruise control switch 206
“DISP” button 88
Door lock switch 109
Emergency flashers switch ... 450
Engine switch 167, 170
Fog light switch 198
Front-wheel drive control switch 220
Heater idle up switch 362, 367
Ignition switch 167, 170
“INFO.” button 88
Light switches 194
Meter control switches 92
Outside rear view mirror switches 134

Not for Reproduction

Power door lock switch 109
Power window switch 137
Rear window defogger switch 361
“RESET” button 88
Seat heater switches 372
Telephone switches 337
Window lock switch 138
Windshield wipers and washer switch 199

T

Tachometer 83
Tailgate 113
Tail lights
Light switch 194
Replacing light bulbs 444
Wattage 526
Talk switch*
Telephone switches* 337
Theft deterrent system
Alarm 73
Engine immobilizer system 71
Tire inflation pressure
Maintenance data 524
Tires 416
Chains 251
Checking 416
If you have a flat tire 474
Inflation pressure 419, 524
Replacing 474
Rotating tires 417
Size 524
Snow tires 250
Spare tire 474
Tools 477
Towing
Emergency towing 453
Towing hook 456
Trailer towing 156
Traction control 234
Trailer towing 156
Transmission
Automatic transmission 178
If the shift lever cannot be shifted from P 183
Manual transmission 186
TRC (Traction Control) 234
Trip information 88, 93
Trip meters 83
Turn signal lights
Replacing light bulbs 438, 444, 446
Turn signal lever 192
Wattage 526

U

Upper anchorage strap 68
USB memory 298
USB port* 265

V

Valet key 102
Vanity mirror 384
Vehicle data recordings 9
Vehicle identification number 510
Vehicle Stability Control (VSC) 234
VSC (Vehicle Stability Control) 234

*: Refer to “Navigation and Multimedia System Owner’s Manual”.

Not for Reproduction

W

Warning buzzers
Fuel filter 463
Key reminder..... 169
Seat belt reminder..... 464
Warning lights
ABS..... 462
Automatic transmission fluid temperature 463
Brake Override system 464
Brake system 461
Charging system 461
Cruise control 464
DPF system 464
Electronic engine control system 462
Four-wheel drive system 463
Fuel system..... 463
Go to service..... 466
Low engine oil level..... 465
Low engine oil pressure..... 461
Low fuel level 464
Malfunction indicator lamp 462
Master warning light 465
Open door 464
Parking brake 465
Seat belt reminder light..... 464
Slip indicator 462
SRS..... 462
Washer
Checking..... 414
Preparing and checking before winter..... 250
Switch 199
Washing and waxing 390
Wheels 421
Replacing wheels..... 474
Size..... 524
Window glasses..... 137
Window lock switch 138
Windows
Power windows..... 137
Rear window defogger 361, 367
Washer 199
Windshield wipers
Intermittent windshield wipers 199
Winter driving tips 250
Wireless communication 304
Wireless remote control key 103
Locking/Unlocking..... 103
Replacing the battery..... 425
WMA disc* 287

Not for Reproduction

Not for Reproduction

*: Refer to “Navigation and Multimedia System Owner’s Manual”.

Not for Reproduction

Not for Reproduction

GAS STATION INFORMATION

Auxiliary catch lever	Fuel filler door*
P. 400	P. 203

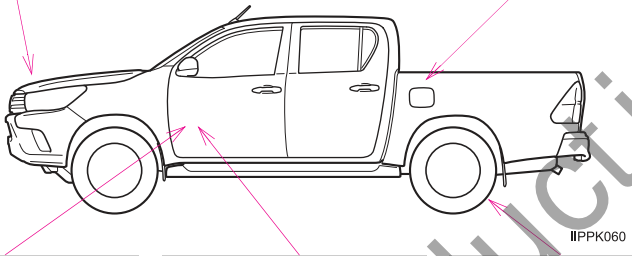

Hood lock release lever	Fuel filler door opener*	Tire inflation pressure
P. 400	P. 203	P. 524

Fuel tank capacity (Reference)		80 L (21.1 gal., 17.6 Imp.gal.)	
Fuel type	Gasoline engine	Unleaded gasoline only	P. 513
	Diesel engine	Diesel fuel only	P. 513
Cold tire inflation pressure			P. 524
Engine oil capacity (Drain and refill — reference)			P. 514
Engine oil type			P. 514

*: If equipped

Not for Reproduction

JQ-3

TOYOTA

Not for Reproduction

Publication No. OM0K324E
Part No. 01999-0K324
Printed in Thailand 01-1708-00
ハイラックス（豪州E）