JAGUAR

The year was 1935 and motoring was still an adventure. Sleek glittering Grand Touring machines bore names that, today, exist only in legend: Bugatti, Duesenberg, Hispano-Suiza. But even in that magnificent company the newest of this glamorous breed made heads turn: Jaguar!

The SS Jaguar 100 came purring onto the scene with thrusting hood and sweeping fenders and an air of graceful movement even when standing still. It was a breathtaking creation that achieved the status of a classic. And yet the first Jaguar was priced substantially lower than its peers. It embodied a philosophy that has spirited the marque ever since: to build cars of great sculptural beauty and luxury that also handle and perform like competition machines, and to sell those cars at prices that make them uncommon values.

Jaguars have made history on the racetracks of the world. They have been exhibited in museums as examples of pure design excellence and have always offered a level of luxury and fine craftsmanship that would be rare in any car, at any price.

The Jaguar Series III carries on this noble tradition. It combines beauty of design, advanced technology and a level of craftsmanship to which most other car manufacturers can only wistfully aspire. It is beyond doubt the best Jaguar ever built.

SPECIFICATIONS OF A JAGUAR
THE PERFECTIONS OF A JAGUAR
THE HEART AND REFLEXES OF A JAGUAR
THE AMENITIES OF A JAGUAR
THE INCOMPARABLE JAGUAR VANDEN PLAS
THE LUXURY OF A JAGUAR
THE ART OF A JAGUAR

THE SCULPTURAL INTEGRITY OF THE JAGUAR SEDAN HAS MADE IT A LIVING CLASSIC.

The Series III has the grace of a thoroughbred at the top of its form. Each taut line flows with pure sculptural logic, one into the next. The sedan has an aesthetic balance that would be outstanding under any circumstances. Seen side by side with the boxlike forms of some other luxury cars, the Jaguar's beauty speaks eloquently for itself. It reveals why some of the world's most discriminating motor critics have called the Jaguar one of the most beautiful sedans ever built.

SPECIFICATIONS OF A JAGUAR
THE PERFECTIONS OF A JAGUAR
THE HEART AND REFLEXES OF A JAGUAR
THE AMENITIES OF A JAGUAR
THE INCOMPARABLE JAGUAR VANDEN PLAS
THE LUXURY OF A JAGUAR

A MASTERPIECE OF COMFORT.

Jaguar seats, faced in supple leather, are specially designed to provide firm orthopedic support and adjustable lumbar support in order to reduce fatigue on long trips. Both front seats recline. The driver's seat height can be electrically adjusted at the touch of a button. The wheel is padded and covered in soft leather and the steering column is adjustable. The result is a remarkable level of individual driving comfort.

The comfort of Jaguar passengers is further enhanced by the wonderfully refreshing silence inside the car. This is achieved by extensive sound deadening techniques which include specially molded floor coverings underneath the thick carpets, glass fiber insulation in the headliners and padded door panels.

UPHOLSTERED BY HAND.

Only the finest and most supple hides are good enough for Jaguar. It takes two and sometimes three hides to furnish a sedan. These hides are individually matched by one master craftsman for color and graining. Then they are coded so that each set of hides will stay together throughout the upholstering process. The final result is both rich and harmonious, as you have every right to expect in a motorcar as luxurious as the Jaguar Series III.

SPECIFICATIONS OF A JAGUAR
THE PERFECTIONS OF A JAGUAR
THE HEART AND REFLEXES OF A JAGUAR
THE AMENITIES OF A JAGUAR
THE INCOMPARABLE JAGUAR VANDEN PLAS

FUEL — INST. — AVE. DIST. AV.SPD. TIME DISP. RESET
JAGUAR

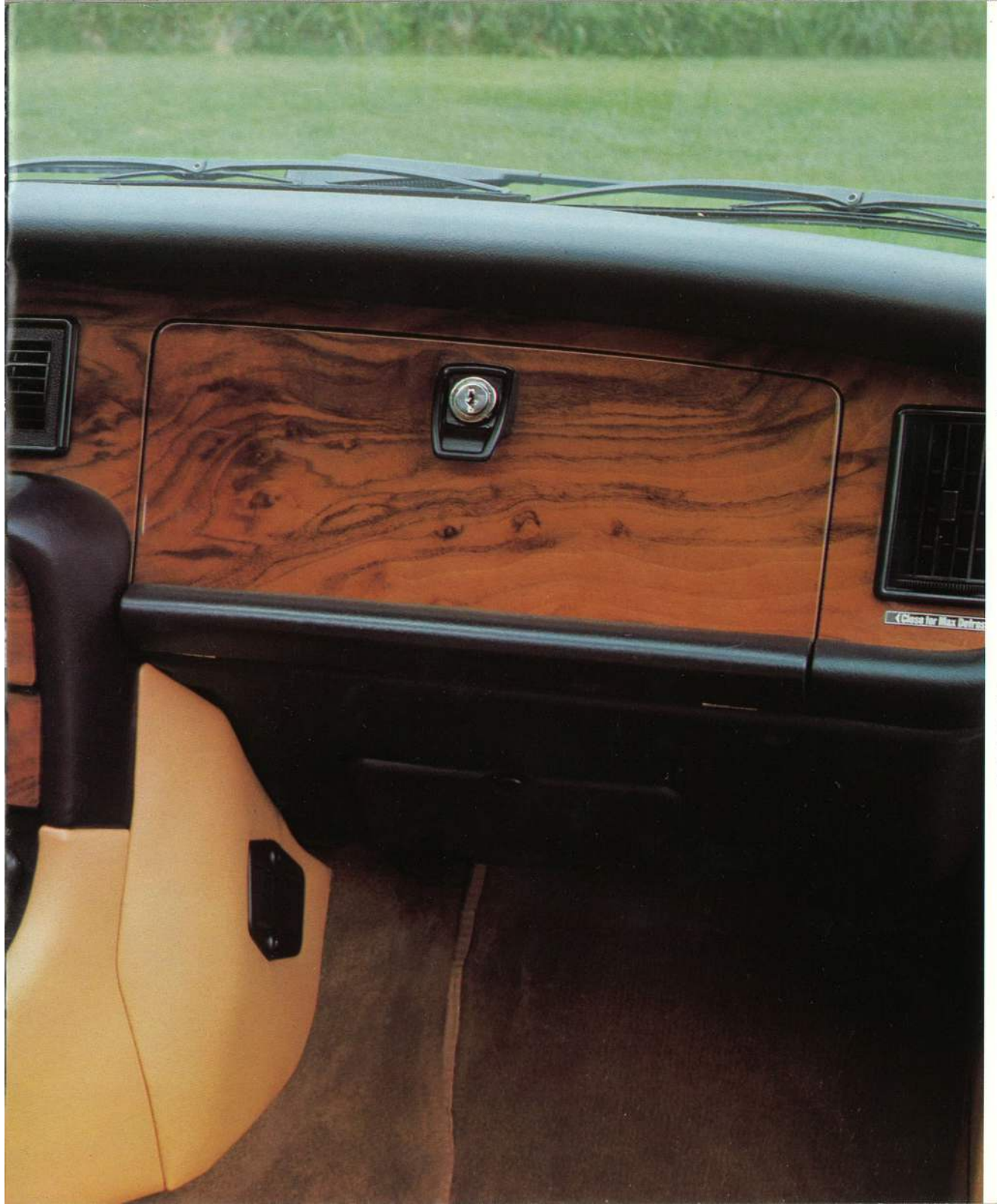

A SUPERB INTELLIGENCE GATHERING SYSTEM.

The Jaguar Series III has been thoughtfully designed to enable its driver to monitor all of the car's major functions quickly and precisely. Instrumentation includes tachometer, speedometer, trip computer, battery voltage indicator, oil pressure gauge, fuel level readout for both tanks and engine temperature gauge. In addition, a battery of warning lights alerts the Jaguar driver to faults in the brake systems or in the ignition system; to low coolant level or oil pressure; to bulb failure in any of four circuits.

Being a Jaguar, the XJ6 surrounds all of this advanced technology in rich walnut veneers which are hand selected for grain and mirror-matched in the classic tradition of cabinetmaking. The beautiful result is a dashboard in which the grain on the left side is virtually identical to the grain on the right. Once assembled, the walnut dashboard is then hand polished to a glossy finish.

SPECIFICATIONS OF A JAGUAR
THE PERFECTIONS OF A JAGUAR
THE HEART AND REFLEXES OF A JAGUAR
THE AMENITIES OF A JAGUAR
THE INCOMPARABLE JAGUAR VANDEN PLAS
THE LUXURY OF A JAGUAR

VANDEN PLAS

THE MOST LUXURIOUS OF JAGUARS.

Coachbuilders to royalty and the sporting aristocracy of Europe, Vanden Plas has created this magnificent limited edition of the Jaguar XJ6 sedan.

Inside, one of the many special luxuries of the Vanden Plas is immediately visible: the dashboard, console and the door panel trim are veneered in rare burled walnut.

On the outside, the Vanden Plas is distinguished by special striping and Vanden Plas identification on the rear deck. Frankly designed for a privileged few motoring enthusiasts, the Jaguar Vanden Plas is inimitable. It sets forth a new standard of elegance blended with Jaguar's high performance and superb handling characteristics.

SPECIFICATIONS OF A JAGUAR

THE PERFECTIONS OF A JAGUAR

THE HEART AND REFLEXES OF A JAGUAR

THE AMENITIES OF A JAGUAR

THE INCOMPARABLE JAGUAR VANDEN PLAS

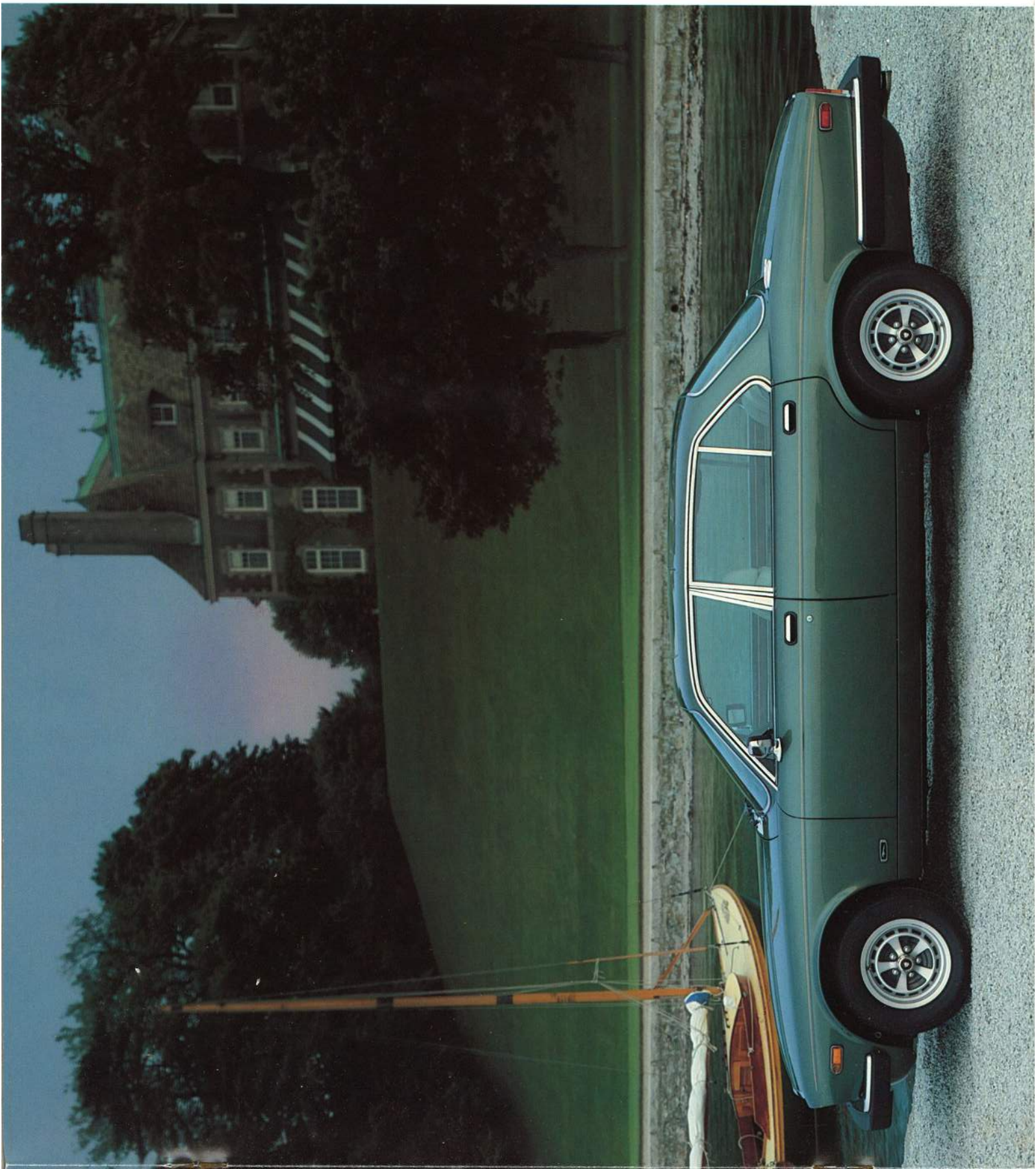

INSIDE THE VANDEN PLAS: A WORLD OF EXCLUSIVE LUXURY.

Vanden Plas created individually contoured seats for both the front and back of this special edition. They are upholstered in rich natural leather. Custom throw rugs are fitted into the passenger footwells front and rear. Rear seat passengers enjoy the extra convenience of individual swivel based reading lamps, map pockets and an armrest that conceals a storage compartment. The sum of Vanden Plas fitments is an exclusive world of comfort and luxury such as few drivers ever enjoy.

THE AMENITIES OF A JAGUAR

THE HEART AND REFLEXES OF A JAGUAR

THE PERFECTIONS OF A JAGUAR

SPECIFICATIONS OF A JAGUAR

A.

B.

C.

D.

E.

P
R
N
D
2
1
SPEED CONTROL
RESUME
ON
ON
OFF
F.

mls km
214.1
FUEL — INST. — AVE.
DIST.
AV. SPD.
TIME
DISP.
RESET
hrs
min
G.

H.

A. The Jaguar trunk is carpeted, illuminated and capacious. It can be locked automatically from the driver's seat.

B. For the convenience of the front seat passenger, there is a concealed mirror that folds into the door of the glove compartment.

C. Halogen headlamps provide whiter, brighter illumination for night driving at turnpike speeds.

D. The sunroof glides open or shut at the touch of a button.

E. Lightweight alloy wheels are fitted with high performance Pirelli P5 tires as standard equipment. Power disc brakes on all four wheels are also standard.

F. Jaguar's cruise control system enables you to select and maintain your preferred cruising speed. If braking is necessary, a touch of the "resume" switch returns the car to the selected speed. Both cruise control and a smooth automatic transmission are standard.

G. A trip computer provides digital readouts of elapsed time, distance and average fuel consumption as well as current fuel consumption and average trip speed.

H. The four-speaker stereophonic AM/FM radio comes equipped with signal scanning and six programmable channels on each band. The cassette player provides Dolby® sound and chrome tape capability. Flanking the radio/cassette are controls for the car's efficient heating and air conditioning system, which regulates itself automatically once you have selected your preferred temperature.

I. Power switches in the driver's door control adjustments for both side view mirrors and the locking of all doors and the trunk. Stereophonic speakers are mounted in each door.

I.

4.2 LITERS OF PROVEN EXCELLENCE.

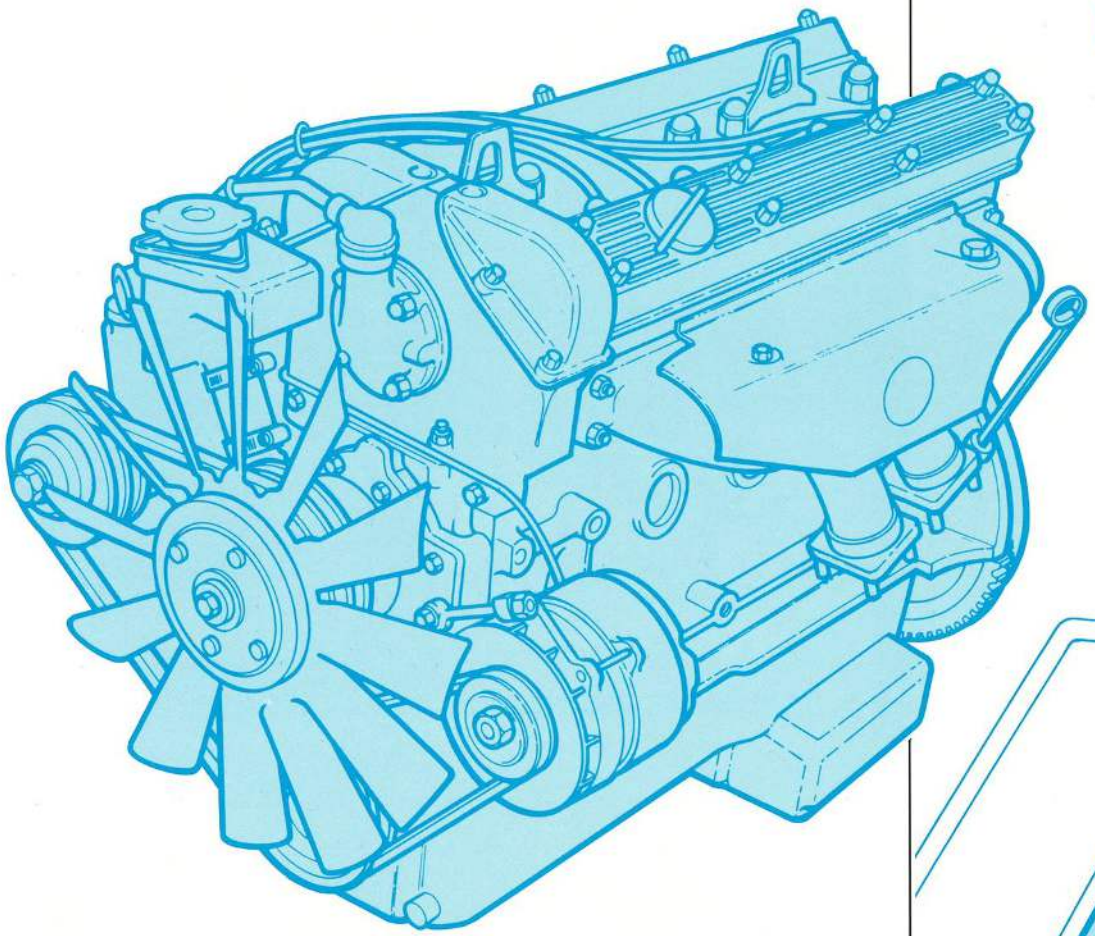

The Jaguar sedan is powered by a smooth, six cylinder, double overhead cam engine that has been perfected by years of racing experience and technological advancement. Turn the key and a transistorized ignition instantly starts up the electronically fuel injected engine. The electronic fuel injection provides precise metering of the air-fuel mixture at all engine speeds. In addition, there is an automatic cold start fuel enrichment system for reliable engine starts even at the lowest temperatures.

A VERSATILE AUTOMATIC TRANSMISSION.

The Jaguar transmission delivers a smooth flow of power throughout all its range, while allowing the driver to "kick down" for quicker acceleration in passing or evasive maneuvers. In addition, a manual override feature gives some advantages of a manual transmission when holding the car in a lower gear for passing or braking.

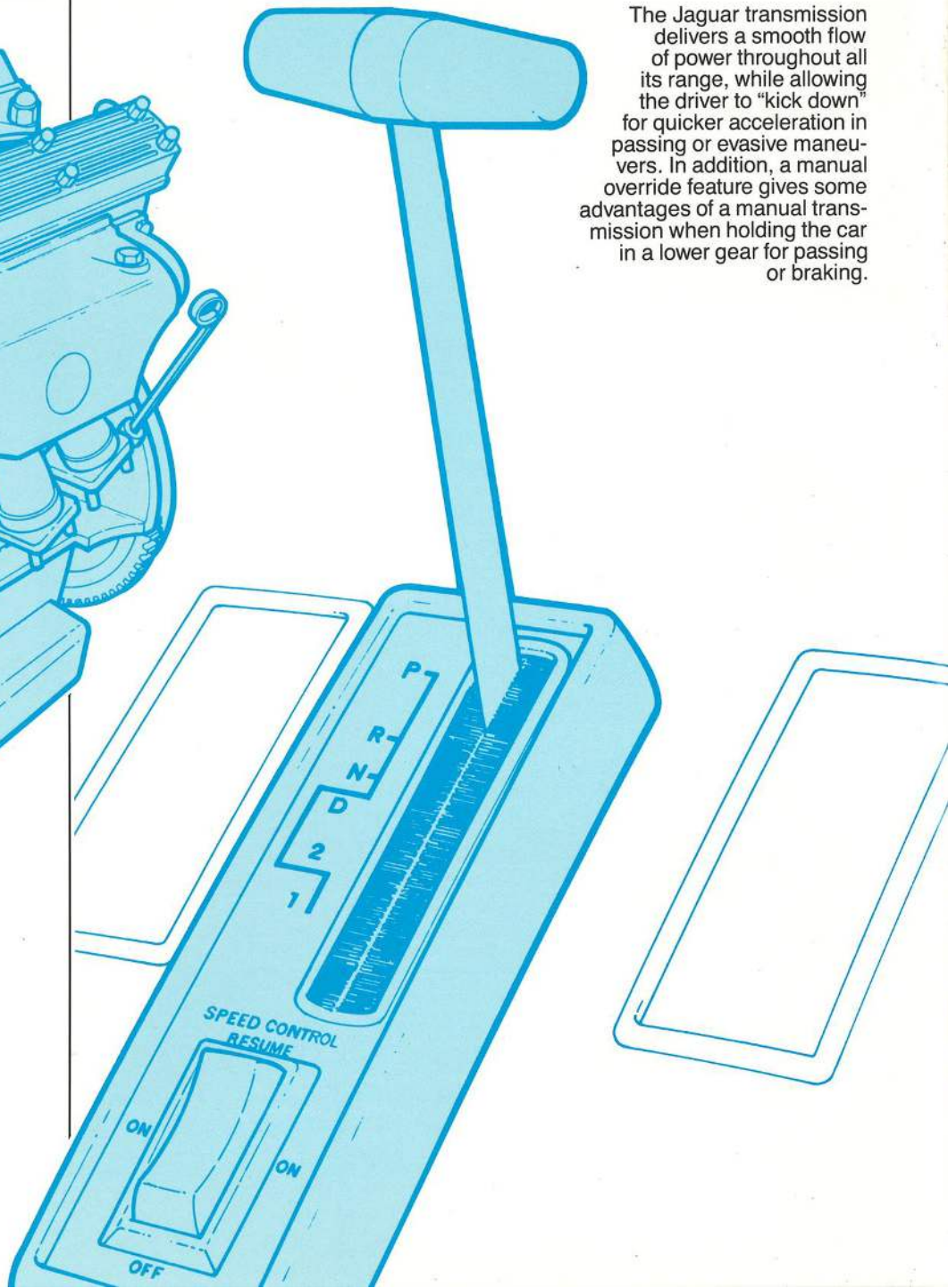

VERY PRECISE STEERING.

For years, race cars have used direct rack and pinion steering mechanisms because they offer the quickest and most precise response. The Jaguar's steering is founded on just such a system, power assisted with only 2.9 turns lock to lock. The rubber mounted telescopic steering column is designed to collapse progressively in the event of a forward collision. The steering wheel itself is adjustable for maximum driving comfort.

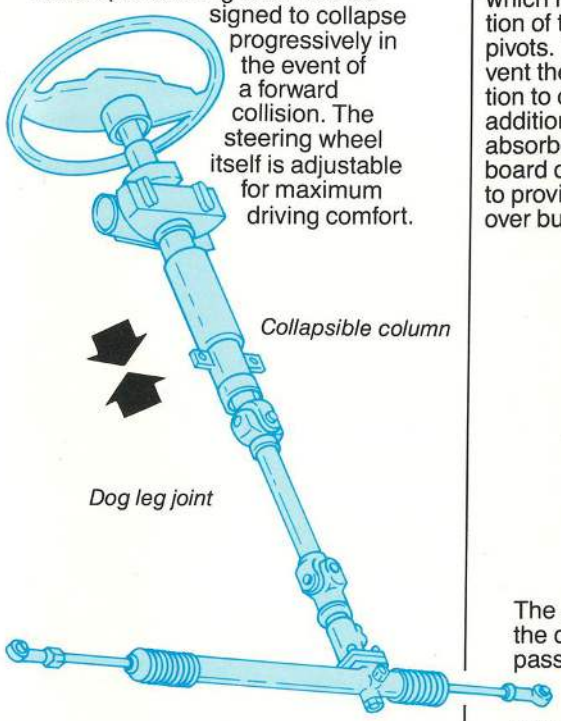

A SPECIAL POISE IN MOTION.

Four wheel independent suspension featuring unequal length control arms up front allows the wheels to remain upright when the body leans during turns. Result: greater control in cornering.

The car's stability is further enhanced by an antidive system which features a unique configuration of the lower control arm pivots. Their function is to prevent the car's natural inclination to dip during braking. In addition, each front shock absorber is mounted outboard of the coil spring to provide better control over bumps and holes.

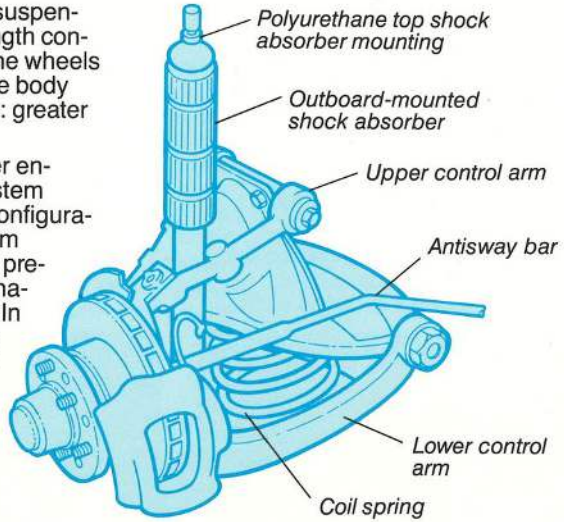

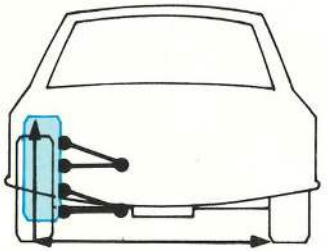

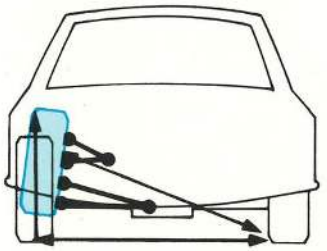

The Jaguar driver will appreciate the car's superb handling. His passengers will enjoy a ride that is justly famous for its smoothness, freedom from vibration, and for its almost astonishing silence. These rare qualities are the result of suspension assemblies mounted on subframes attached to the body by specially engineered rubber mounts. These mounts, carefully calibrated as to hardness and flexibility, absorb road noise and vibration.

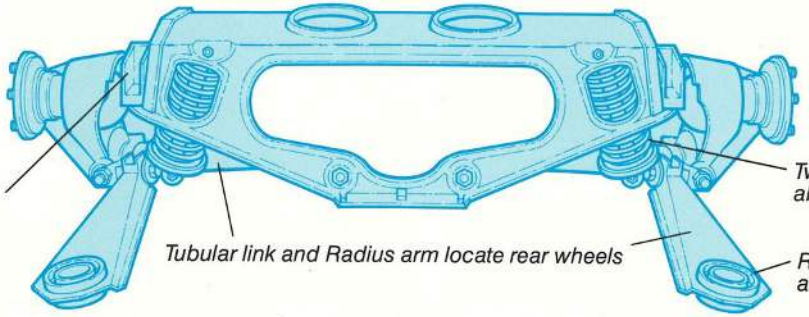

JAGUAR STOPPING POWER.

Because of the car's high performance capabilities, it is especially important that the Jaguar braking system be both extremely strong yet sensitive to the driver's touch. This is achieved with the help of a direct acting power assistance system which insures sure, steady braking even with light pedal pressures.

Ventilated front discs provide four cooling surfaces for faster heat dissipation. Additional cooling is achieved through an increased disc surface area. The disc is cast in the form of two metal plates lined by metal ribbing. The rear discs are mounted inboard to reduce the unsprung weight over the wheels and thereby improve roadholding.

Dual independent hydraulic circuits to all brakes insure 80% braking power even if one brake circuit is damaged. Each of the two pistons in the master cylinder works both front brakes and one rear brake through separate hydraulic lines and brake calipers.

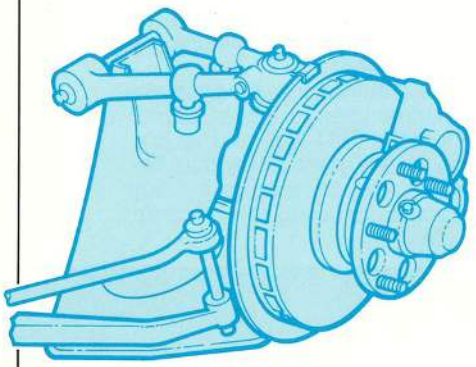

HOW WE MAKE THE BEST JAGUAR EVER BUILT.

Jaguars have always been evolutionary cars. Rather than imposing a superficial "newness" every year, Jaguars evolve over longer periods, getting better and better every year. Improvements are added as they are perfected. New quality control procedures, too, are implemented as we create them.

Thus, the 1984 Jaguar is substantially better than the equivalent car of five years ago.

THE BODY.

Jaguar bodies are pressed from high tensile steel and welded together with rigid body-frame and roof supports. Attention to detail is intense, from the first immersion in a bath of rust preventative primer to the final hand finishing of the car's paint.

Extra strength is engineered into the Jaguar sedan on the drawing board and carefully constructed to make the finished car tougher and more durable than any car we have ever built.

Consider the graceful roof pillars. Slender but strong, their design enhances all around visibility from within the Jaguar while maintaining full structural integrity.

Similar combinations of elegant design and inner strength can be found throughout the 1984 Jaguar. This is a machine whose grace will endure because it is solidly founded on a classic design and painstaking construction techniques.

THE SEATS.

Front and back, within and without, Jaguar seating is remarkable. The fully reclining front seats and rear bench seats are orthopedically designed for firm lumbar support, which lessens fatigue.

It requires two to three individual hides to trim a Jaguar. These are specially chosen by one master leather-cutter whose eye seeks the ideal matching of color and grain. When the most compatible hides have been found, they are specially coded so that they will remain a set all through the painstaking process of hand upholstery. The hides are hand cut by the craftsman who chose them. Then they are hand sewn and hand fitted over the seat forms, which themselves are meticulously hand constructed. The seats are carefully built up with layer upon layer of padding, hand fitted and hand finished throughout.

THE DASHBOARD.

Veneers of rare natural black walnut are individually chosen for each Jaguar by a master cabinetmaker who has been perfecting his art for forty years. Near identical twin veneers, cut from the same part of the same tree, are laid end to reverse end so that the left side of the dashboard is a mirror image of the right. This attention to detail is in the great tradition of English cabinetmaking, predating Mr. Chippendale.

The veneered dashboard is hand sanded and varnished with a specially tough polyvinyl coating, then hand sanded again and varnished again. The result is uncommonly smooth and durable with the warmth and individuality that only real wood can impart.

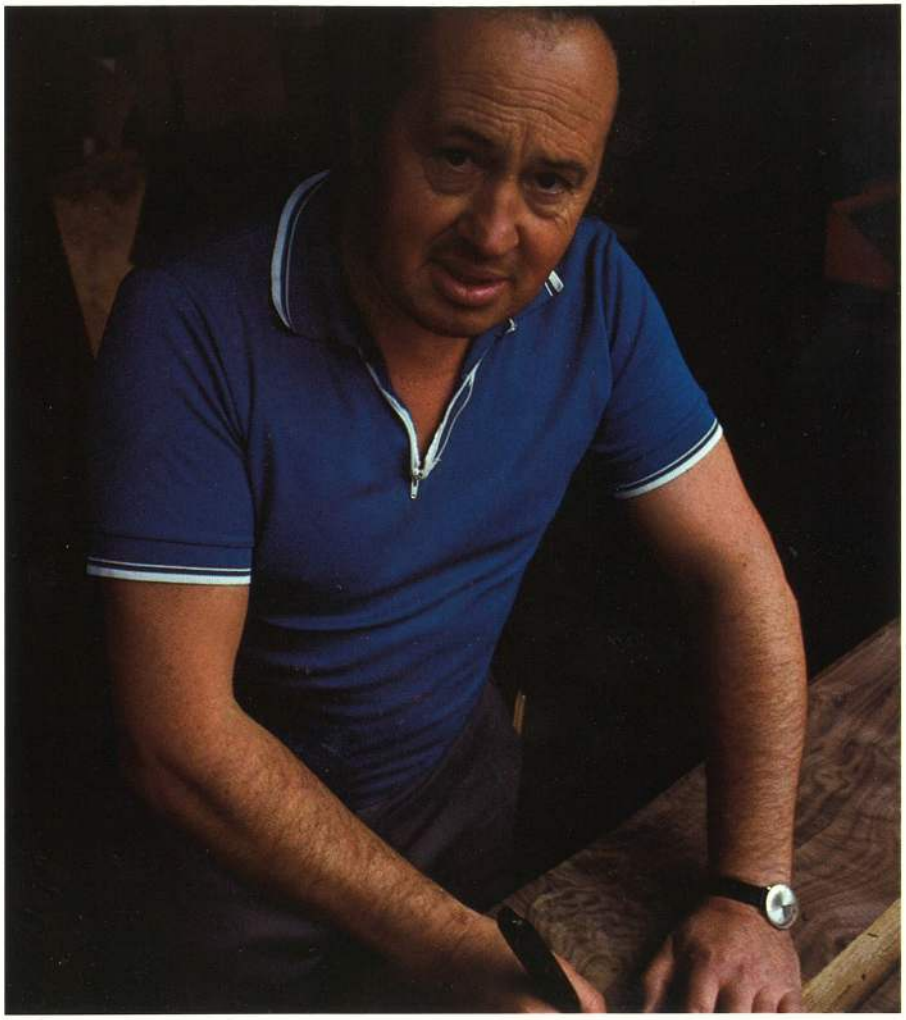

THE ASSEMBLY.

In the famous Jaguar assembly plant at Brown's Lane in Coventry, the cars glide slowly under huge skylights while a sophisticated combination of advanced technology and human perfectionism creates the best Jaguar ever built.

Inspectors in white coats supervise the line making innumerable spot checks in addition to the normal inspections that occur at every station. White gloved craftsmen insert Jaguar windows, fit them and seal them. Highly sensitive ultrasonic devices are used to check the door and window seals, thus insuring that the famous silence of a Jaguar in motion will continue, undisturbed by even the most microscopic leakage of air.

Every Jaguar is the subject of continuous inspection from the start of its manufacture. Every craftsman and inspector is accountable: Each signs the production record for the car as it proceeds along the line.

Then, at the very end of the manufacturing process, there is the ultimate inspection: the Jaguar road test. Each car is individually driven over winding Coventry roads and checked out for any imperfections.

It is this stringent insistence upon quality that makes the latest Jaguar the strongest, most precisely put together and altogether the best Jaguar we have ever built.

THE PEOPLE.

There is a tradition of pride and craftsmanship at the Jaguar factory that is evident in the dedication of Jaguar people and in the shining result of their work.

From the white coated foremen and inspectors, to master craftsmen who have been building Jaguars for decades, to the eager apprentices just beginning their careers, being part of a legend inspires a special pride in our people.

JAGUAR XJ6 SPECIFICATIONS

ENGINE: • 6-cylinder water-cooled in-line with twin overhead camshafts • 7-bearing crankshaft • Exhaust and evaporative emission control • Catalytic converters • Compression Ratio: 8.1:1 • Bore: 3.625 in. • Stroke: 4.17 in. • Stroke/Bore Ratio: 1.15: 1 • Displacement: 258 cu in. (4235cc) • Ignition: Constant Energy system incorporating an electronic amplifier and high performance coil • Fuel Injection: Electronic with separate cold start injector • Fuel Pump: Electric • Fuel Tank Capacities: Left: 11.8 U.S. gallons, Right: 11.8 U.S. gallons (unleaded) • Sump Capacity: 7 quarts.

DRIVE TRAIN: • Transmission: Borg Warner three-speed fully automatic with overriding manual control; torque converter • Final Drive: Independent Hypoid type • Rear Axle Ratio: 2.88: 1 • Gear Ratios: Reverse 2.09: 1; First 2.40: 1; Second 1.45: 1; Drive 1.0: 1.

STEERING: • Rack and pinion, power-assisted • Adjustable steering column • Turns–lock to lock: 2.87 • Turning Circle: 40 ft.

SUSPENSION: • Front: Independent with "anti-dive" geometry incorporating coil springs, shock absorbers, anti-sway bar • Rear: Independent with drive shafts forming upper links and paired shock absorbers with coil springs.

BRAKES: • Power-assisted 4-wheel disc brakes with independent circuits front to rear • Front: 11.06 in. diameter ventilated discs • Rear: 10.32 in. diameter discs mounted inboard.

ROAD WHEELS: • 15 in. diameter vented alloy wheels, fitted with Pirelli P5 215/70VR15 radial-ply tubeless tires.

ELECTRICAL: • Negative-ground 12-volt system • Battery: Delco Freedom • Battery Rating: 75 amp/hrs. at 20 hour rate • Alternator: 75 amps.

INSTRUMENTS AND CONTROLS: • Speedometer with trip odometer • Electric tachometer • Trip computer with U.S. or metric digital display of elapsed time, distance and fuel consumption as well as clock time, average and current fuel consumption rate and average speed • Gauges for battery condition, oil pressure, water temperature and fuel level • Warning lights for oxygen sensor, heated rear window, high beam, hazard light, seat belts, low coolant, inoperative parking or tail/stop lights, ignition, brake fluid/failure, handbrake and oil pressure • Multi-purpose lever on left side of steering column controls cruise control "set," headlights, low beam/high beam flasher and directionals; right side lever controls electric windshield washer and self-parking, two-speed wipers with intermittent and single-wipe capability • Central locking switches for doors, trunk and windows • Dual electrically operated remote control exterior mirrors • Cruise control master "on/off" and "resume" switch • Padded, leather-covered steering wheel.

BODY: • Four-door, all-steel • Integral body/chassis construction • Positive lock anti-burst door catches with central locking and unlocking of doors and locking of trunk by key or operation of locking lever in driver's door; trunk unlocked by key only • Electrically-operated sunroof • Power windows • Tinted glass • Heated rear window • Fully-carpeted, illuminated trunk • Dual coach stripes • Halogen headlights.

INTERIOR: • Grained walnut facia and upper console switch panels • Factory-installed air conditioning/heating unit with automatic temperature control • Automatic fan with overriding two-speed manual control • Sound System: AM/FM stereo radio with digital scan tuning and electric aerial; cassette player with Dolby® and chrome tape capability; 4-way speaker balance • Deep pile carpeting throughout • Fully-reclining leather-faced front seats with adjustable lumbar support, adjustable for reach and rake (with adjustable head restraints); driver's seat height adjusted electrically; leather-faced rear seats with center armrest • Map pockets on rear of front seats • Inertia-reel seat belts • Console stowage box and lockable glove box • Cigarette lighter • Four-door operated interior courtesy lights • Door open warning lights, armrests, bins and stereo speakers in all doors • Front map reading light and interior light operated form facia switches.

INTERIOR DIMENSIONS: • Front Seat Headroom: 38.1 in. • Rear Seat headroom: 35.9 in. • Front Seat Legroom (maximum): 39.3 in. • Rear Seat Legroom: 36.6 in. • Front Seat Shoulder Width: 54.2 in. • Rear Seat Shoulder Width: 53.7 in. • Trunk Height: 18 in. • Trunk Depth: 35.5 in. • Trunk Width: 44.5 in. • Trunk Capacity (gross): 17 cu ft. • Trunk Capacity (useable with spare tire–MVMA): 9.55 cu ft.

MAIN DIMENSIONS: • Wheelbase: 113 in. • Overall Height: 52.8 in. Overall Width: 69.6 in. • Overall Length: 199.6 in. • Track at Front: 58.3 in. • Track at Rear: 58.9 in. • Ground Clearance: 5 in. • Curb Weight: 4,070 lbs.

OPTIONAL EQUIPMENT: • None.

JAGUAR VANDEN PLAS SPECIFICATIONS

ENGINE: • 6-cylinder water-cooled in-line with twin overhead camshafts • 7-bearing crankshaft • Exhaust and evaporative emission control • Catalytic converters • Compression Ratio: 8.1:1 • Bore: 3.625 in. • Stroke: 4.17 in. • Stroke/Bore Ratio: 1.15: 1 • Displacement: 258 cu in. (4235cc) • Ignition: Constant Energy system incorporating an electronic amplifier and high performance coil • Fuel Injection: Electronic with separate cold start injector • Fuel Pump: Electric • Fuel Tank Capacities: Left: 11.8 U.S. gallons, Right: 11.8 U.S. gallons (unleaded) • Sump Capacity: 7 quarts.

DRIVE TRAIN: • Transmission: Borg Warner three-speed fully automatic with overriding manual control; torque converter • Final Drive: Independent Hypoid type • Rear Axle Ratio: 2.88: 1 • Gear Ratios: Reverse 2.09: 1; First 2.40: 1; Second 1.45: 1; Drive 1.0: 1.

STEERING: • Rack and pinion, power-assisted • Adjustable steering column • Turns–lock to lock: 2.87 • Turning Circle: 40 ft.

SUSPENSION: • Front: Independent with "anti-dive" geometry incorporating coil springs, shock absorbers, anti-sway bar • Rear: Independent with drive shafts forming upper links and paired shock absorbers with coil springs.

BRAKES: • Power-assisted 4-wheel disc brakes with independent circuits front to rear • Front: 11.06 in. diameter ventilated discs • Rear: 10.32 in. diameter discs mounted inboard.

ROAD WHEELS: • 15 in. diameter vented alloy wheels, fitted with Pirelli P5 215/70VR15 radial-ply tubeless tires.

ELECTRICAL: • Negative-ground 12-volt system • Battery: Delco Freedom • Battery Rating: 75 amp/hrs. at 20 hour rate • Alternator: 75 amps.

INSTRUMENTS AND CONTROLS: • Speedometer with trip odometer • Electric tachometer • Trip computer with U.S. or metric digital display of elapsed time, distance and fuel consumption as well as clock time, average and current fuel consumption rate and average speed • Gauges for battery condition, oil pressure, water temperature and fuel level • Warning lights for oxygen sensor, heated rear window, high beam, hazard light, seat belts, low coolant, inoperative parking or tail/stop lights, ignition, brake fluid/failure, handbrake and oil pressure • Multi-purpose lever on left side of steering column controls cruise control "set," headlights, low beam/high beam flasher and directionals; right side lever controls electric windshield washer and self-parking, two-speed wipers with intermittent and single-wipe capability • Central locking switches for doors, trunk and windows • Dual electrically operated remote control exterior mirrors • Cruise control master "on/off" and "resume" switch • Padded, leather-covered steering wheel.

BODY: • Four-door, all-steel • Integral body/chassis construction • Positive lock anti-burst door catches with central locking and unlocking of doors and locking of trunk by key or operation of locking lever in driver's door; trunk unlocked by key only • Electrically-operated sunroof • Power windows • Tinted glass • Heated rear window • Fully-carpeted, illuminated trunk • Dual coach stripes • Halogen headlights.

INTERIOR: • Burled walnut facia, upper console and door inserts • Factory-installed air conditioning/heating unit with automatic temperature control • Automatic fan with overriding two-speed manual control • Sound System: AM/FM stereo radio with digital scan tuning and electric aerial; cassette player with Dolby® and chrome tape capability; 4-way speaker balance • Cigarette lighter • Deep pile carpeting throughout with specially woven passenger footwell rugs • Fully-reclining front seats with leather back and seat facings; adjustable lumbar support; adjustable for reach and rake (with adjustable head restraints); driver's seat height adjusted electrically • Map pockets on rear of front seats • Leather-covered rear seats contoured for two passengers with stowage box in center armrest • Inertia-reel seat belts • Stowage box with leather-trimmed lid in extended center console; cigarette lighter and ashtray for rear passengers • Lockable glove box • Four-door operated interior courtesy lights • Door open warning lights incorporating puddle lights, leather-covered armrests and bins and stereo speakers in all doors • Front map reading light and interior light operated from facia switches • Swivel mounted reading lamps for rear passengers.

INTERIOR DIMENSIONS: • Front Seat Headroom: 38.1 in. • Rear Seat headroom: 35.9 in. • Front Seat Legroom (maximum): 39.3 in. • Rear Seat Legroom: 36.6 in. • Front Seat Shoulder Width: 54.2 in. • Rear Seat Shoulder Width: 53.7 in. • Trunk Height: 18 in. • Trunk Depth: 35.5 in. • Trunk Width: 44.5 in. • Trunk Capacity (gross): 17 cu ft. • Trunk Capacity (useable with spare tire–MVMA): 9.55 cu ft.

MAIN DIMENSIONS: • Wheelbase: 113 in. • Overall Height: 52.8 in. • Overall Width: 69.6 in • Overall Length: 199.6 in • Track at Front: 58.3 in. • Track at Rear: 58.9 in. • Ground Clearance: 5 in. • Curb Weight: 4,075 lbs.

OPTIONAL EQUIPMENT: None.

JAGUAR CARS CONFORM TO U.S. FEDERAL MOTOR VEHICLE SAFETY AND AIR POLLUTION STANDARDS APPLICABLE AT THEIR DATE OF MANUFACTURE. SPECIFICATIONS AND COLORS SUBJECT TO CHANGE WITHOUT NOTICE.

LITHO IN U.S.A. 75M 9/83

Jaguar Cars Inc., Leonia, N.J.
In Canada: Jaguar Canada Inc., Bramalea, Ont.

FACETS OF A LEGEND.

The Series III is undeniably beautiful. Its capabilities for high performance, precise handling and quick response are instantly apparent when you drive it. The luxury is everywhere, in rich materials and fine craftsmanship and in the many electronic conveniences that pamper you. But what makes the Series III the best Jaguar ever built is yet another quality. A quality that is less immediately apparent. This is the great care with which the car is put together, finished and inspected. And that great care is backed up by our extensive warranty.

For two years or 36,000 miles, whichever comes first, Jaguar will repair or replace any part of the car which proves defective. The Pirelli P5 tires carry their own manufacturer's warranty. Your dealer has the full details of the Jaguar limited warranty.

SPECIFICATIONS OF A JAGUAR
THE PERFECTIONS OF A JAGUAR
THE HEART AND REFLEXES OF A JAGUAR
THE AMENITIES OF A JAGUAR
THE INCOMPARABLE JAGUAR VANDEN PLAS
THE LUXURY OF A JAGUAR