GM Bulletin No.: 13364
Date: October 2013

Service Bulletin

SERVICE UPDATE

SUBJECT: **Service Update for Inventory Vehicles Only**
Passenger Side Front Air Bag Replacement
Expires October 31, 2014

MODELS: **2014 Cadillac Escalade**
2014 Chevrolet Suburban, Tahoe
2014 GMC Yukon, Yukon XL

Vehicles involved in this service update were placed on stop delivery October 18, 2013. Completion of the service procedure contained in this bulletin will release the vehicle from stop delivery and allow a dealer to deliver the vehicle to a customer.

This service update involves vehicles in dealer inventory only and will expire October 31, 2014.

PURPOSE

This bulletin provides a service procedure to replace the passenger side front air bag on certain 2014 model year Cadillac Escalade; Chevrolet Suburban, Tahoe; and GMC Yukon, Yukon XL vehicles. These vehicles may have a condition in which the passenger side front air bag will not function as designed due to an electrical connector not being properly engaged. This condition may set diagnostic trouble code (DTC) B0020 – Passenger Frontal Deployment Loop Stage 2 Resistance Above Threshold. If this occurs, the Sensing and Diagnostic Module (SDM) will request the instrument cluster to illuminate the air bag malfunction indicator lamp. If a crash event occurs the SDM will attempt air bag deployment, but, if the mating terminals do not make contact, the secondary stage of the passenger side front air bag will not deploy, increasing the risk of injury to the occupant.

This service procedure should be completed on involved vehicles currently in dealership inventory as soon as possible but no later than October 31, 2014, at which time this bulletin will expire.

VEHICLES INVOLVED

All involved vehicles are identified by VIN in the Global Warranty Management System – Investigate Vehicle History Application. Dealership technicians should always check this site to confirm vehicle involvement prior to beginning any required inspections and/or repairs. It is

Copyright 2013 General Motors. All Rights Reserved.

important to routinely use this tool to verify eligibility because not all similar vehicles may be involved regardless of description or option content.

Additionally, a list of involved vehicles currently in dealer inventory is available on the “Service Update Bulletin Information” link under the “Service” tab in GM GlobalConnect.

PART INFORMATION

Parts required to complete this service update are to be obtained from General Motors Customer Care and Aftersales (GMCCA). Please refer to your “involved vehicles listing” before ordering parts. Normal orders should be placed on a DRO = Daily Replenishment Order. In an emergency situation, parts should be ordered on a CSO = Customer Special Order.

Part Number	Description	Quantity/Vehicle
22744316	AIR BAG ASM-I/P (EBONY)	1
22744317	AIR BAG ASM-I/P (VR DARK CASHMERE)	1
22744318	AIR BAG ASM-I/P (DK TITANIUM)	1
22744319	AIR BAG ASM-I/P (COCOA)	1

SERVICE PROCEDURE

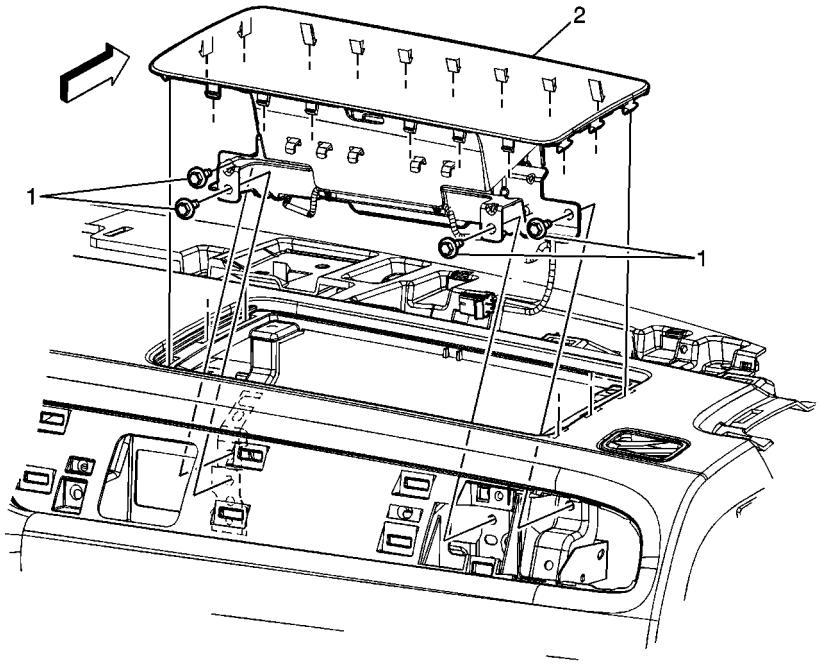

1692831

1. Remove the passenger side airbag module. Refer to *Airbag Instrument Panel Module* in SI.
2. Install a new passenger side airbag module. Refer to *Airbag Instrument Panel Module* in SI.

FLOOR PLAN REIMBURSEMENT

Dealers in possession of vehicles included in the Stop Delivery are eligible for reimbursement of floor plan expense upon completion of this program. This reimbursement is limited to the number of days from the Stop Delivery message to receipt of the program parts and/or repair procedures. Floor plan reimbursement beyond these dates is not allowed. The amount of reimbursement should be charged as a net amount expense using the program labor operation provided.

WARRANTY TRANSACTION INFORMATION

Submit a transaction using the table below. All transactions should be submitted as a ZFAT transaction type, unless noted otherwise.

Labor Code	Description	Labor Time	Net Item
9100211	Air Bag Instrument Panel Module Replacement		N/A
	Escalade	0.6*	
	Suburban, Tahoe, Yukon, Yukon XL	0.7*	
9100212	Floor Plan Reimbursement	N/A	**

* Includes 0.2 to deploy pyrotechnic device.

** The amount identified in “Net Item” should represent the product of the vehicle’s average daily interest rate (see table below) multiplied by the actual number of days the vehicle was in dealer inventory and not available for sale. This reimbursement is limited to the number of days from the date of the stop delivery message (October 18, 2013) to the date the repair is completed and the vehicle is ready for sale (not to exceed 14 days):

Vehicle	US Reimbursement Amount
Escalade	$10.08
Suburban	$7.66
Tahoe	$7.00
Yukon	$7.77
Yukon XL	$8.29

DEALER PROGRAM RESPONSIBILITY

Dealers must take the steps necessary to ensure that the service update correction has been made to all involved vehicles in dealer inventory before selling or dealer-trading the vehicle, but no later than October 31, 2014.

GM bulletins are intended for use by professional technicians, NOT a "do-it-yourselfer". They are written to inform these technicians of conditions that may occur on some vehicles, or to provide information that could assist in the proper service of a vehicle. Properly trained technicians have the tools, equipment, safety instructions, and know-how to do a job properly and safely. If a condition is described, DO NOT assume that the bulletin applies to your vehicle, or that your vehicle will have that condition. See your dealer for information on whether your vehicle may benefit from the information.

We Support Voluntary Technician Certification

GM CUSTOMER CARE AND AFTERSALES
DCS3083
URGENT - DISTRIBUTE IMMEDIATELY

Date: October 29, 2013

Subject: 13364 – Service Update Bulletin
Passenger Side Front Air Bag Replacement
Release From Stop Delivery

Models: 2014 Cadillac Escalade
2014 Chevrolet Suburban, Tahoe
2014 GMC Yukon, Yukon XL

To: All Cadillac, Chevrolet and GMC Dealers

Attention: General Manager, Service Advisor, Service Manager, Parts and Service Director, Parts Manager, New Vehicle Sales Manager, and Warranty Administrator

General Motors is announcing Service Update Bulletin 13364 today. The total number of U.S. vehicles involved is 36. Please see the attached bulletin for details.

Vehicles involved in this service update were placed on stop delivery October 18, 2013. Completion of the service procedure contained in this bulletin will release the vehicle from stop delivery and allow a dealer to deliver the vehicle to a customer.

Global Warranty Management (GWM)
The Investigate Vehicle History screen in GWM will be updated October 30, 2013. A list of involved vehicles currently in dealer inventory is also attached.

Service Update Bulletin (SUB) Information Link
The SUB Information Link in GlobalConnect will be updated in the near future.

END OF MESSAGE
GM CUSTOMER CARE AND AFTERSALES